Polo Estate 1998 ➤

Simos injection and ignition system									
Engine ID	APF	AUR							

Edition 12.1999

Protected by copyright. Copying for private or commercial purposes, in part or in whole, is not permitted unless authorised by Volkswagen AG. Volkswagen AG does not guarantee or accept any liability with respect to the correctness of information in this document. Copyright by Volkswagen AG.

satelettronica

List of Workshop Manual Repair GroupsList of Workshop Manual Repair GroupsList of Workshop Manual Repair Groups

Polo Estate 1998 ➤

Simos injection and ignition system

Repair Group

01 - Self-diagnosis

24 - Mixture preparation, Injection

28 - Ignition system

Protected by copyright. Copying for private or commercial purposes, in part or in whole, is not permitted unless authorised by Volkswagen AG. Volkswagen AG does not guarantee or accept any liability with respect to the correctness of information in this document. Copyright by Volkswagen AG.

satelettronica

Technical information should always be available to the foremen and mechanics, because their careful and constant adherence to the instructions is essential to ensure vehicle road-worthiness and safety. In addition, the normal basic safety precautions for working on motor vehicles must, as a matter of course, be observed.

All rights reserved.
No reproduction without prior agreement from publisher.

Copyright © 2011 Volkswagen AG, Wolfsburg

00056408220

Contents

01 - Self-diagnosis . . . 1

1 General to self-diagnosis . . . 1
1.1 General to self-diagnosis . . . 1
1.2 Features of self-diagnosis . . . 1
1.3 Technical data of self-diagnosis . . . 1
1.4 Significance of EPC warning lamp (fault lamp for electronic accelerator) in dash panel insert . . . 2
1.5 Significance of exhaust emissions warning lamp . . . 3
1.6 Connecting fault reader V.A.G 1551 and selecting engine control unit . . . 4
1.7 Connecting vehicle diagnosis, testing and information system VAS 5051 and selecting engine control unit . . . 6

2 Fault memory . . . 9
2.1 Fault memory . . . 9
2.2 Automatic test sequence for interrogating all fault memories . . . 9
2.3 Interrogating and erasing engine control unit fault memory . . . 10

3 Fault table: SAE P0 codes . . . 11
3.1 Fault table: SAE P0 codes . . . 11

4 Fault table: SAE P1 codes . . . 16
4.1 Fault table: SAE P1 codes . . . 16

5 Final control diagnosis . . . 25
5.1 Final control diagnosis . . . 25
5.2 Performing final control diagnosis . . . 25

6 Readiness code . . . 39
6.1 Readiness code . . . 39
6.2 Reading readiness code . . . 40
6.3 Generating readiness code . . . 41

7 Measured value blocks . . . 48
7.1 Measured value blocks . . . 48
7.2 Safety precautions . . . 48
7.3 Read measured value block . . . 48

8 Evaluating measured value blocks, display groups 0...9 -Basic functions- . . . 49
8.1 Evaluating measured value blocks, display groups 0...9 -Basic functions- . . . 49

9 Evaluating measured value blocks, display groups 10...29 -Ignition- . . . 54
9.1 Evaluating measured value blocks, display groups 10...29 -Ignition- . . . 54

10 Evaluating measured value blocks, display groups 30...49 -Lambda regulation- . . . 59
10.1 Evaluating measured value blocks, display groups 30...49 -Lambda regulation- . . . 59

11 Evaluating measured value blocks, display groups 50...69 -Speed regulation- . . . 63
11.1 Evaluating measured value blocks, display groups 50...69 -Speed regulation- . . . 63

12 Evaluating measured value blocks, display groups 70...79 -Reducing emissions- . . . 67
12.1 Evaluating measured value blocks, display groups 70...79 -Reducing emissions- . . . 67

13 Evaluating measured value blocks, display groups 91...95 -Performance increase- . . . 68
13.1 Evaluating measured value blocks, display groups 91...95 -Performance increase- . . . 68

14 Evaluating measured value blocks, display groups 120...129 -Communication- . . . 68
14.1 Evaluating measured value blocks, display groups 120...129 -Communication- . . . 68

24 - Mixture preparation, Injection . . . 69

1 Servicing injection system . . . 69
1.1 Servicing injection system . . . 69
1.2 Fitting locations overview . . . 69
1.3 General notes on injection . . . 77
1.4 Removing and installing parts of the injection system . . . 78
1.5 Dismantling and assembling intake manifold - Upper part . . . 85

Copyright by Volkswagen AG. Volkswagen AG does not guarantee or accept any liability with respect to the correctness of information
satelettronica

1.6 Dismantling and assembling fuel rail with injectors . . . 88
1.7 Dismantling and assembling air cleaner . . . 91
1.8 Safety precautions . . . 93
1.9 Rules for cleanliness . . . 94
1.10 Technical data . . . 94

2 Checking components . . . 95
2.1 Checking components . . . 95
2.2 Checking Lambda probe heating for Lambda probe before catalyst . . . 95
2.3 Checking Lambda probe heating for Lambda probe after catalyst . . . 98
2.4 Checking air mass meter . . . 102
2.5 Checking intake air temperature sender . . . 104
2.6 Checking throttle valve control part . . . 108
2.7 Checking coolant temperature sender . . . 113
2.8 Checking engine speed sender . . . 116
2.9 Checking injectors . . . 118
2.10 Checking fuel pressure regulator and holding pressure . . . 125
2.11 Checking intake air system for leaks (unmetered air) . . . 128

3 Checking functions . . . 129
3.1 Checking functions . . . 129
3.2 Idling check . . . 129
3.3 Checking Lambda probe and Lambda regulation before catalyst . . . 130
3.4 Checking Lambda probe and Lambda regulation after catalyst . . . 135
3.5 Checking engine operating mode . . . 139
3.6 Checking intake manifold change-over . . . 141

4 Engine control unit . . . 143
4.1 Engine control unit . . . 143
4.2 Function . . . 143
4.3 Checking control unit voltage supply . . . 143
4.4 Replacing engine control unit . . . 145
4.5 Coding engine control unit . . . 146
4.6 Coding variations of engine control unit . . . 147
4.7 Erasing learnt values and adapting engine control unit to throttle valve control part and exhaust gas recirculation valve . . . 147

5 Checking additional signals . . . 150
5.1 Checking additional signals . . . 150
5.2 Checking speed signal . . . 150
5.3 Checking engine speed signal . . . 152
5.4 Checking signal from/to air conditioning system . . . 153
5.5 Checking signal from clutch pedal switch . . . 157
5.6 Checking signal from brake light switch and brake pedal switch . . . 160
5.7 Checking signal from power steering pressure switch . . . 165
5.8 Checking starter signal . . . 167
5.9 Checking data bus . . . 168

28 - Ignition system . . . 170

1 Servicing ignition system . . . 170
1.1 Servicing ignition system . . . 170
1.2 General notes on ignition system . . . 170
1.3 Removing and installing parts of ignition system . . . 171
1.4 Safety precautions . . . 174
1.5 Test data, spark plugs . . . 175
1.6 Checking Hall sender . . . 175
1.7 Checking ignition transformer . . . 177
1.8 Checking knock sensor . . . 181
1.9 Check misfiring recognition . . . 183

Protected by copyright. Copyright by Volkswagen AG. Volkswagen AG does not guarantee or accept any liability with respect to the correctness of information in this document.
This document is a service manual and is intended for use by qualified Volkswagen dealerships only.
satelettronica

01 - Self-diagnosis

1 - General to self-diagnosis

1.1 - General to self-diagnosis

1.2 - Features of self-diagnosis

The Simos control unit (J361) for the fuel injection and ignition system is equipped with a fault memory.

If faults occur in the sensors and components being monitored, they will be stored in the fault memory together with an indication of the type of fault.

After evaluating the information, the engine control unit decides among different faults => Fault table page 16 and stores these until the contents of the fault memory is erased.

Faults which only occur sporadically will have the addendum "sporadic fault" on the print out. These faults will be indicated on the display by the addendum "/SP". The cause of sporadic faults can be e.g. a loose contact or a brief open circuit. If a sporadic fault does not occur again within 40 engine starts, it will be erased from the fault memory.

The faults stored can be read-out with the fault reader V.A.G 1551, the vehicle system tester V.A.G 1552 or the new tester VAS 5051 => Page 10 .

The fault memory must be erased after the faults have been rectified => Page 10 .

Note:

General information for self-diagnosis can be found in the instruction manuals for the fault reader V.A.G 1551, vehicle system tester V.A.G 1552 or the new tester VAS 5051.

1.3 - Technical data of self-diagnosis

Control unit identification

The control unit version is displayed when the fault reader V.A.G 1551, the vehicle system tester V.A.G 1552 or the new tester VAS 5051 is connected and engine electronics control unit selected => Page 4 .

Equipment

Engine code	APF	AUR
System designation	SIMOS 3.3	SIMOS 3.3
Exhaust emissions fulfil	D4 standard	EURO IV
Exhaust emissions warning lamp	no	yes
EPC system	yes	yes
Self-diagnosis	yes	yes
Final control diagnosis	yes	yes
Operating mode of data transfer to V.A.G 1551/1552	Rapid data transfer	Rapid data transfer
Control unit coding	V.A.G 1551/1552 or VAS 5051	V.A.G 1551/1552 or VAS 5051

Copyright by Volkswagen AG. Volkswagen AG does not guarantee or accept any liability with respect to the correctness of information in this document. Copyright by Volkswagen AG. Reproduced by copyright. Copying for private or commercial purposes, part or in whole, is not permitted unless authorised by Volkswagen AG.
satelettronica

Engine code	APF	AUR
Fault memory	Non-volat. mem.1)	Non-volat. mem.1)
Memory for learnt values	Non-volat. mem.1)	Non-volat. mem.1)
Lambda regulation	2 probes	2 probes
Knock control	1 knock sensor	1 knock sensor
Variable intake manifold	yes	yes
Secondary air system	yes	yes
Exhaust gas recirculation	yes	yes

1) Independent of voltage supply.

Functions which can be selected when using the fault readers V.A.G 1551/1552 or VAS 5051

Note:

The prerequisites to select the desired functions can be found in the following table.

Function		Prerequisite		
Functions on fault reader V.A.G 1551 or on system tester V.A.G 1552		Engine stopped, ignition switched on	Engine running at idling speed	Vehicle being driven
01	Interrogate control unit version	yes	yes	yes
02	Interrogate fault memory	yes1)	yes	yes
03	Final control diagnosis	yes	no	no
04	Basic setting2)	yes	no	no
05	Erase fault memory	yes1)	yes	yes
06	End output	yes	yes	yes
07	Code control unit	yes	no	no
08	Read measured value block	yes	yes	yes
10	Adapting	yes	no	no
11	Login procedure	yes	no	no

1) Only carry out with ignition switched on, when engine does not start (operate starter for at least 5 seconds first).

2) Must be carried out after performing the following work: Replacing engine control unit, throttle valve control part, exhaust gas recirculation valve or engine.

1.4 - Significance of EPC warning lamp (fault lamp for electronic accelerator) in dash panel insert

"EPC" is the abbreviation for Electronic Power Control.

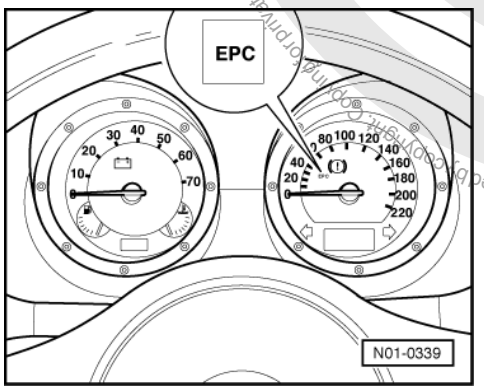

Protected by copyright. Copyright by Volkswagen AG. Volkswagen AG does not guarantee or accept any liability with respect to the correctness of information in this document. Copyright by Volkswagen AG. Reproduced for private or commercial purposes in part or whole is not permitted unless authorised by Volkswagen AG.
satelettronica

-> Fitting location of EPC warning lamp

When the ignition is switched on the engine control unit checks all components which are important for the correct functioning of the electronic power control.

If no faults are detected in the electronic accelerator (EPC system), the engine control unit switches the EPC warning lamp off after the engine has started.

If faults are detected in electronic accelerator system when the engine is running, the engine control unit will switch on the EPC lamp (these faults are marked in the fault table). Simultaneously an entry is made in the engine control unit fault memory.

1.5 - Significance of exhaust emissions warning lamp

Only vehicles with on-board diagnosis

If the engine control unit detects a fault this is indicated by switching the exhaust emissions warning lamp on.

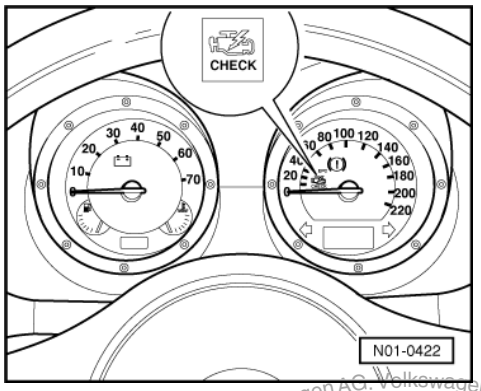

-> Location of exhaust emissions warning lamp

Note:

The exhaust emissions warning lamp can switch on in the continuous or flashing mode. Always interrogate fault memory => Page 10 .

- Flashing mode: There is a fault present which can damage the catalyst when continuing to drive at this power output. If this occurs, continue driving only at reduced output.
- Continuous mode: There is a fault present which causes the emissions to deteriorate. Interrogate engine or gearbox control unit in this case.
- Interrogate the fault memory if the customer has a complaint or there is a driving characteristic problem and the exhaust gas warning lamp does not light up, this is because faults can be stored which will not switch the exhaust gas warning lamp on immediately.

Functional check:

- Switch on ignition:
  the exhaust emissions warning lamp must light-up.

If the exhaust emissions warning lamp does not light-up with ignition switched on:

- Check combi-instrument and exhaust emissions warning lamp as follows:

=> Electrical system self-diagnosis; Repair group 01

If the exhaust emissions warning lamp lights-up with ignition switched on, continue check as follows:

Protected by copyright. Copying for private or commercial purposes, in part or in whole, is not permitted unless authorised by Volkswagen AG. Volkswagen AG does not guarantee or accept any liability with respect to the correctness of information in this document. Copyright by Volkswagen AG.

satelettronica

- Start engine and run at idling speed:
  The exhaust emissions warning lamp must go out after a few seconds.

If the exhaust emissions warning lamp does not go out:

- Interrogate fault memory, if necessary, repair any faults and then erase fault memory => Page 10 , interrogating and erasing fault memory.

1.6 - Connecting fault reader V.A.G 1551 and selecting engine control unit

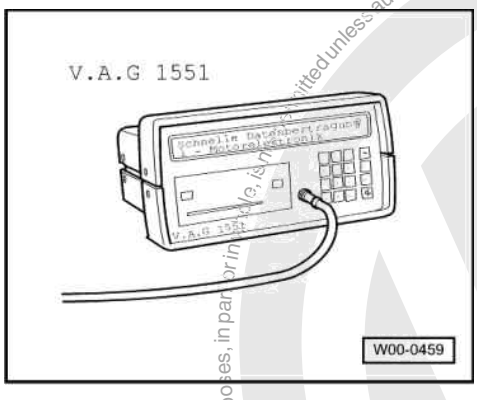

Special tools, workshop equipment, testers, measuring instruments and auxiliary items required

- V.A.G 1551 Fault reader

Notes:

- The vehicle system tester V.A.G 1552 can be used instead of the fault reader V.A.G 1551, however a print-out is not possible.
- All functions of V.A.G 1551/1552 can also be carried out with the new tester VAS 5051. Connecting VAS 5051 => Page 6 .

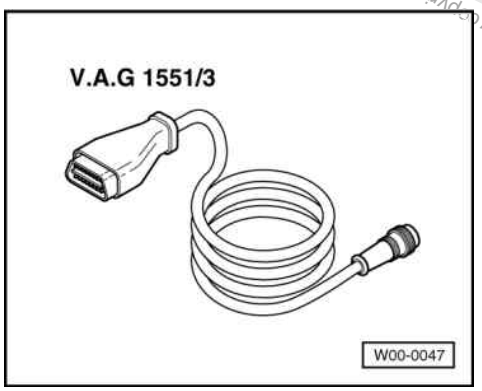

- V.A.G 1551/3 Cable

Protected by copyright. Copying for private or commercial purposes, in part or in whole, is not permitted unless authorised by Volkswagen AG. Volkswagen AG does not guarantee or accept any liability with respect to the correctness of information in this document. Copyright by Volkswagen AG.
satelettronica

Test conditions

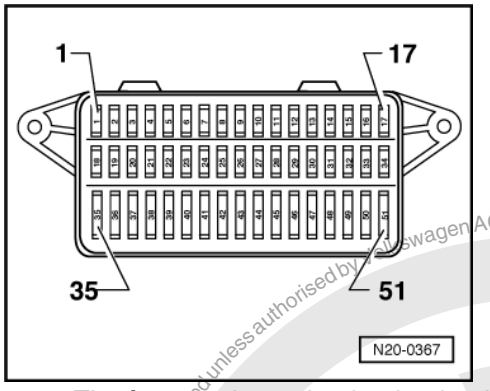

- -> The fuses 1, 3, 15, 24, 27, 31, 34, 36 and 40 must be OK.
- Earth connection in plenum chamber OK.
- The battery voltage must be at least 11.5 V.
- All electrical consumers, e.g. lights and rear window heating must be switched off.
- If the vehicle is equipped with an air conditioning system, this must be switched off.

Work sequence

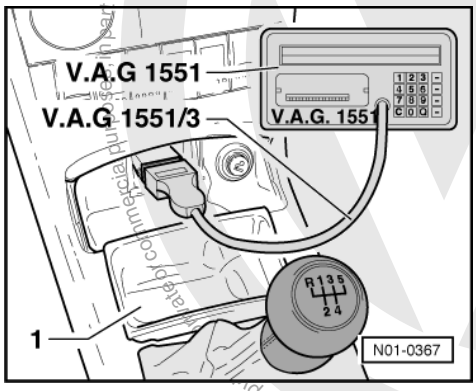

- -> Remove ash tray -1-.
- Connect fault reader V.A.G 1551 with cable V.A.G 1551/3.

After the fault reader has been connected:

- Depending upon desired function:
  Switch ignition on
  or
  Start engine => Page 2 , Table "Selectable functions".

Notes:

◆ If the display remains blank, check voltage supply for diagnostic connection:

=> Current flow diagrams, Electrical fault finding and Fitting locations

◆ If the display does not indicate as described in the work sequence:

=> Fault reader operating instructions

◆ If due to an input fault "Fault in the data transfer!" is displayed, pull wire off fault reader, reconnect and repeat work step.

- Operate fault reader taking into account the information on the display:

-> Indicated on display:

Reproduced by copyright holder, unless authorised by Volkswagen AG. Volkswagen AG does not guarantee or accept any liability with respect to the correctness of information in this document. Copyright by Volkswagen AG.
satelettronica

```
V.A.G - SELF DIAGNOSIS     HELP
     1 - Rapid data transfer*
     2 - Flash code output*
```

* Appears alternately

- Operate fault reader taking into account the information on the display:
- Press key 1 for "Rapid data transfer".
- Press keys 0 and 1 for address word "Engine electronics" and confirm entry with Q key.

-> The control unit identification and the coding are indicated on the display, e.g.:

```
6K0906033A
```

- 6K0 906 033A = Part No. of control unit (for latest control unit versions see parts catalogue)
- 1.6 ltr. = Engine displacement
- 2V = 2-valve
- SIMOS 3 = System designation
- 00 = No. of changed adaption channels
- HS = Manual gearbox (hand change)
- S105 = Programme level number
- Coding 00011 = Control unit coding, coding variants of engine control unit => Page 147 .
- WSC xxxxx = Workshop code from V.A.G 1551, of the workshop which carried out the last coding. (If the factory coding has not been changed, WSC 00000 appears)

Notes:

- Replace control unit if the control unit version displayed does not correspond to the vehicle => Page 145 .
- Check to see if the correct coding has been used if there are driving characteristic problems/malfunctions => Page 147 .

- Press ⇒key.

-> Indicated on display:

```
Rapid data transfer      HELP
Select function XXX
```

- Further measures see repair procedures.

1.7 - Connecting vehicle diagnosis, testing and information system VAS 5051 and selecting engine control unit

All functions which could be done with V.A.G 1551/1552 can also be done with the new tester VAS 5051 in the operating mode: "vehicle self-diagnosis":

=> Operating instructions for Vehicle Diagnosis, Testing and Information System VAS 5051.

Special tools, workshop equipment, testers, measuring instruments and auxiliary items required

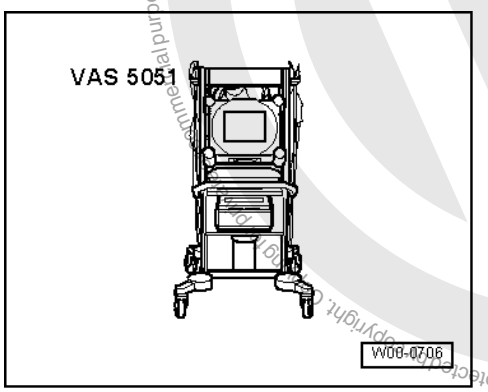

Protected by copyright. Copyright by Volkswagen AG. Copyright by Volkswagen AG. Volkswagen AG does not guarantee or accept any liability with respect to the correctness of information in this document. Copyright by Volkswagen AG. Reproduction, in part or in whole, is permitted unless authorised by Volkswagen AG.
satelettronica

- VAS 5051 Vehicle Diagnosis, Testing and Information System

Test conditions

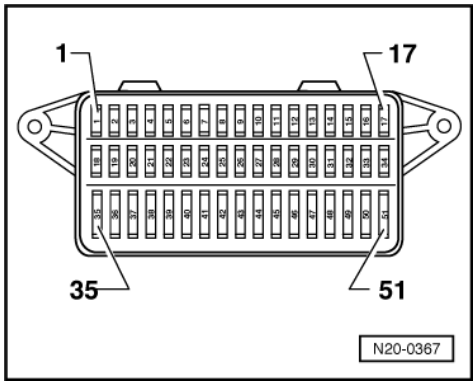

- -> The fuses 1, 3, 15, 24, 27, 31, 34, 36 and 40 must be OK.
- Earth connection in plenum chamber OK.
- The battery voltage must be at least 11.5 V.
- All electrical consumers, e.g. lights and rear window heating must be switched off.
- If the vehicle is equipped with an air conditioning system, this must be switched off.

Work sequence

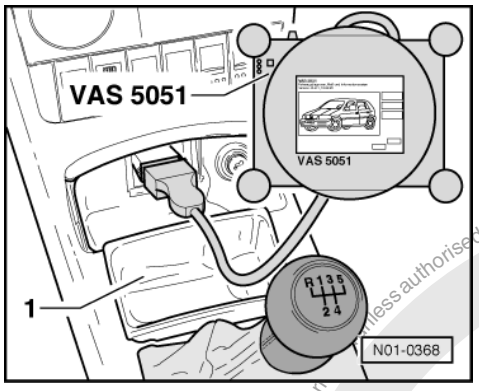

- Connect the tester VAS 5051 using diagnostic cable VAS 5051/1 or VAS 5051/3 as follows:
- -> Remove ash tray -1-.
- Fit diagnosis cable connector onto diagnosis connector.

- Depending upon desired function:
  Switch ignition on
  or
  Start engine => Page 2 , Table "Selectable functions".

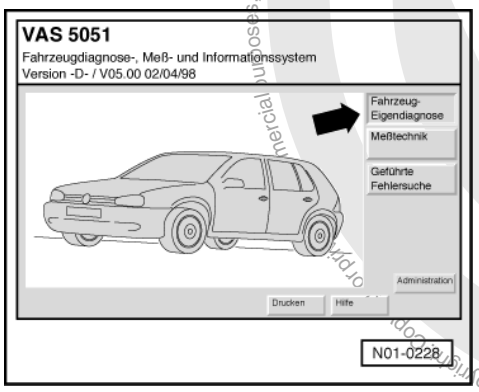

Protected by copyright. Copyright by Volkswagen AG.
Copyright by Volkswagen AG. Volkswagen AG does not guarantee or accept any liability with respect to the correctness of information in this document.
satelettronica

Notes:

- In the functions 04 - Basic setting/08 - Read data block, the display zones will be listed from top to bottom.
- If the display does not indicate as described in the work sequence:

=> Operating instructions for Vehicle Diagnosis, Testing and Information System VAS 5051.

-> Indicated on display:

Select operating mode:

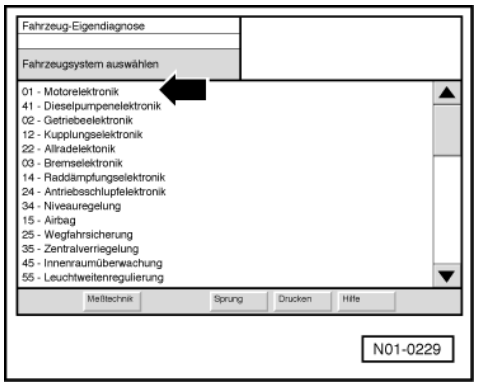

- Press the button on the display for "Vehicle self-diagnosis" -arrow-.

-> Indicated on display:

Select vehicle system:

- Press keys "01 - Engine electronics" on the display -arrow-.

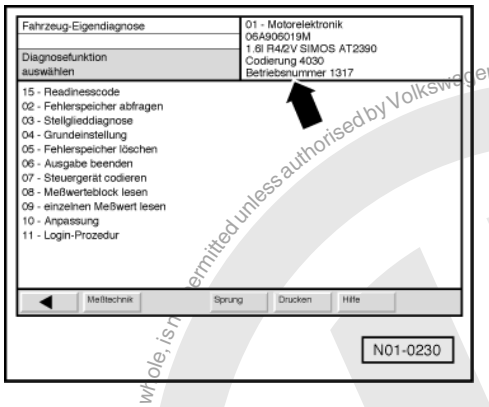

-> On the display the control unit identification and coding are displayed, e.g.:

If the coding differs from the vehicle version, then:

- Checking control unit coding => Page 147 ,
  coding variations for engine control unit.

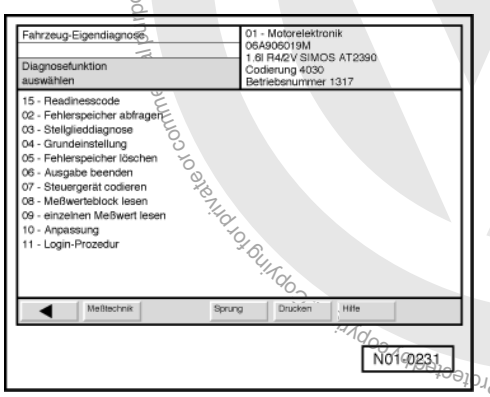

Protected by copyright. Copying for private or commercial purposes, in part or in whole, is not permitted unless authorised by Volkswagen AG. Volkswagen AG does not guarantee or accept any liability with respect to the correctness of information in this document. Copyright by Volkswagen AG.
satelettronica

-> Indicated on display:

Select diagnostic function:

At this point all diagnostic functions are available.

- Press the desired function on the display.
- Further measures see repair procedures.

2 - Fault memory

2.1 - Fault memory

Interrogate and erase engine control unit fault memory=> Page 10 .

2.2 - Automatic test sequence for interrogating all fault memories

Special tools, workshop equipment, testers, measuring instruments and auxiliary items required

- Fault reader V.A.G 1551 (or vehicle system tester V.A.G 1552) with cable V.A.G 1551/3

Work sequence

Note:

All functions which could previously be performed with V.A.G 1551/1552 can also be performed with the new tester VAS 5051.

The various control units/components are connected together via a data bus. This is why it is always sensible to interrogate the fault memory of all control units first with the "automatic test sequence".

During test and assembly work faults can be recognised from other control units like e.g. plug disconnected. Therefore on completion the fault memories of all control units must be interrogated and erased. To do this:

- Press key 0 twice for address word "Automatic test sequence" and confirm entry with Q key. The V.A.G 1551 transmits all known address words one after the other.

When a control unit answers with its identification the number of stored faults appears on the display or "No fault recognised".

Any system faults that are stored will be displayed one after the other and printed out. The V.A.G 1551 will then transmit the next address word.

-> The automatic test sequence has ended when the following appears on the display:

```
V.A.G - SELF-DIAGNOSIS     HELP
1 - Rapid data transfer*
2 - Flash code output*
```

- Erase all fault memories and then carry out a road test.

Observe the valid safety measures during a test drive => Page 48 .

During the road test the following operating conditions must be fulfilled:
- The coolant temperature must exceed 80 °C .

- When the temperature is reached, the operating conditions
  Idling
  Part throttle
  Enrichment

satelettronica

Full throttle
Overrun
must be attained several times.
- At full throttle the speed must exceed 3500 rpm.

Again interrogate the fault memories of all control units using the "automatic test sequence".

If no fault is stored:

- Press the ⇒key.

-> Indicated on display:

```
Rapid data transfer     HELP
Select function XX
```

- Press keys 0 and 6 for the function "End output" and confirm entry with the Q key.
- Switch off ignition.

2.3 - Interrogating and erasing engine control unit fault memory

Special tools, workshop equipment, testers, measuring instruments and auxiliary items required

◆ Fault reader V.A.G 1551 (or vehicle system tester V.A.G 1552) with cable V.A.G 1551/3

Note:

All functions which could previously be performed with V.A.G 1551/1552 can also be performed with the new tester VAS 5051.

Work sequence

- Connect fault reader V.A.G 1551 (V.A.G 1552). Start engine and select "Address word" 01 of engine control unit. When doing this the engine must be running at idling speed.
  (Connecting fault reader and selecting engine control unit => Page 4 .)

Only when engine does not start:

- Operate the starter for at least 5 seconds. Then do not switch the ignition off.

- Switch on fault reader printer with the print key. The warning lamp in key must light up.

-> Indicated on display:

```
Rapid data transfer     HELP
Select function XX
```

- Operate fault reader taking into account the information on the display:
- Press keys 0 and 2 for function "Interrogate fault memory" and confirm entry with Q key.

-> The number of faults stored or "No fault recognised!" will be shown on the display.

```
X Faults recognised!
```

If no fault is stored:

- Press ⇒key.

If one or more faults are stored:

The stored faults will be displayed and printed out one after the other.

-> After the stored faults have been printed out, the display will show:

Protected by copyright. Copying for private or commercial purposes, in part or in whole, is not permitted unless authorised by Volkswagen AG. Volkswagen AG does not guarantee or accept any liability with respect to the correctness of information in this document. Copyright by Volkswagen AG.
satelettronica

```
Rapid data transfer      HELP
Select function XX
```

- Press keys 0 and 5 for the function "Erase fault memory" and confirm entry with Q key.

-> Indicated on display:

```
Rapid data transfer
Fault memory is erased!
```

Note:

If the ignition is switched off between "Interrogate fault memory" and "Erase fault memory" the fault memory will not be erased.

- Press ⇒key.

-> Indicated on display:

```
Rapid data transfer      HELP
Select function XX
```

- Press keys 0 and 6 for the function "End output" and confirm entry with the Q key.
- Switch off ignition.
- Rectify faults printed out using fault table:
  SAE P0 codes=> Page 16

Note:

If an emissions test is to be performed after the fault memory is erased, generate readiness code => Page 41 .

3 - Fault table: SAE P0 codes

3.1 - Fault table: SAE P0 codes

Notes:

- The fault code overview is listed according to SAE or V.A.G code.
- Electronic accelerator "EPC" relevant faults are indicated additionally by the electronic accelerator warning lamp ("EPC warning lamp") in dash panel insert.
- Explanation of the fault types (e.g. "open circuit/short circuit to earth"):

=> Fault reader operating instructions

- If components are indicated as faulty:
  First check the wiring and connectors to these components as well as the system earth connections according to current flow diagram. This is particularly relevant if faults are output as "occurring sporadically" (SP).
- Erase fault memory after rectifying fault =>Page 10 .

V.A.G 1551 print out, e.g.:

16497 P0113 035

Intake air temperature sender -G42

Signal too large

Sporadic fault

Protected by copyright. Copying for private or commercial purposes, in part or in whole, is not permitted unless authorised by Volkswagen AG. Volkswagen AG does not guarantee or accept any liability with respect to the correctness of information in this document. Copyright by Volkswagen AG.
satelettronica

Explanation:

- 16497 = Fault code
- P0113 = Additional fault code (only for USA at present and disregard)
- 035 = Fault type as a number
- Intake air temperature sender -G42 = Faulty current path or incorrect location
- Signal too large = Fault type as text
- Sporadic faults = Faults that are not always present e.g. loose contact

Fault code		Fault text	Fault elimination
SAE	V.A.G		
P0102	16486	Air mass meter -G70 signal too low	- Check air mass meter => Page 102 - Check intake system for leaks=>Page 128
P0103	16487	Air mass meter -G70 signal too high	
P0112	16496	Intake air temperature sender -G42 signal too low	- Check intake air temperature sender => Page 104
P0113	16497	Intake air temperature sender -G42 signal too high	
P0116	16500	Coolant temperature sender -G62 implausible signal	- Check coolant temperature sender => Page 113 - Check thermostat: => Repair group 19; Removing and installing parts of cooling system; Parts of cooling system, engine-side Parts of cooling system, engine-side
P0117	16501	Coolant temperature sender -G62 signal too low	
P0118	16502	Coolant temperature sender -G62 signal too high	

Fault code		Fault text	Fault elimination
SAE	V.A.G		
P0130	16514	Bank 1 probe 1 electrical fault in current circuit	- Check Lambda probe and Lambda regulation before catalyst=> Page 130
P0131	16515	Bank 1 probe 1 voltage too low	- Check Lambda probe heating before catalyst => Page 95
P0132	16516	Bank 1 probe 1 voltage too high	
P0133	16517	Bank 1 probe 1 signal too slow	
P0134	16518	Bank 1 probe 1 no activity	
P0135	16519	Bank 1 probe 1 heating current circuit electrical fault	

Fault code		Fault text	Fault elimination
SAE	V.A.G		
P0136	16520	Bank 1 probe 2 electrical fault in current circuit	- Check Lambda probe and Lambda control after catalyst => Page 135 - Check Lambda probe heating after catalyst => Page 98
P0137	16521	Bank 1 probe 2 voltage too low	
P0138	16522	Bank 1 probe 2 voltage too high	
P0139	16523	Bank 1 probe 2 signal too slow	
P0140	16524	Bank 1 probe 2 no activity	
P0141	16525	Bank 1 probe 2 heating current circuit electrical fault	

Fault code	Fault text	Fault elimination

satelettronica

SAE	V.A.G		
P0170	16554	Bank 1, fuel measuring system faulty	- Check fuel pressure regulator and holding pressure => Page 125
			- Check injectors =>Page 118
			- Check intake system for leaks => Page 128
			- Check fuel pump: => Repair group 20; Removing and installing parts of fuel system; Check fuel pump Check fuel pump
			- Check secondary air system for leaks: => Repair group 26; Secondary air system
			- Check vacuum pipes for leaks

Fault code		Fault text	Fault elimination
SAE	V.A.G		
P0171	16555	Bank 1 fuel measuring system too lean	- Check fuel pressure regulator and holding pres. => Page 125
			- Check injectors =>Page 118
			- Check intake system for leaks => Page 128
			- Check Lambda probe and Lambda regulation before catalyst => Page 130
			- Check activated charcoal filter solenoid valve 1 => Page 25 , final control diagnosis
			- Check fuel pump: => Repair group 20; Removing and installing parts of fuel system; Check fuel pump Check fuel pump
Continued =>next page			

Fault code		Fault text	Fault elimination
SAE	V.A.G		
P0171	16555	Bank 1, fuel measuring system, system too lean	- Check exhaust system for leaks: => Repair group 26; Removing and installing parts of exhaust system
			- Check secondary air system for leaks: => Repair group 26; Secondary air system
			- Check vacuum pipes for leaks

Fault code		Fault text	Fault elimination
SAE	V.A.G		
P0172	16556	Bank 1, fuel measuring system, system too rich	- Check fuel pressure regulator and holding pressure => Page 125
			- Check injectors =>Page 118
			- Check Lambda probe and Lambda regulation before catalyst => Page 130
			- Check activated charcoal filter solenoid valve 1 => Page 25 , final control diagnosis

Protected by copyright. Copying for private or commercial purposes, in part or in whole, is not permitted unless authorised by Volkswagen AG. Volkswagen AG does not guarantee or accept any liability with respect to the correctness of information in this document. Copyright by Volkswagen AG.
satelettronica

Fault code		Fault text	Fault elimination
SAE	V.A.G		
P0300	16684	Misfiring recognised	- Check injectors=>Page 118 - Check ignition cables and spark plugs => Page 171 - Check ignition transformer => Page 177 - Check misfiring detection => Page 183
P0301	16685	Cyl. 1 Misfiring recognised	
P0302	16686	Cyl. 2 misfiring recognised	
P0303	16687	Cyl. 3 misfiring recognised	
P0304	16688	Cyl. 4 misfiring recognised	

Note:

For faults in the ignition outputs of the engine control unit, misfiring is always indicated in pairs:

Ignition output 1 = Misfire in cylinders 1 and 4

Ignition output 2 = Misfire in cylinders 2 and 3

Fault code		Fault text	Fault elimination
SAE	V.A.G		
P0321	16705	Engine speed sender -G28 implausible signal	- Check engine speed sender =>Page 116
P0322	16706	Engine speed sender -G28 no signal	
P0327	16711	Knock sensor 1 -G61 signal too low	- Check knock sensor => Page 181
P0328	16712	Knock sensor 1 -G61 signal too high	- Loosen knock sensor and retighten to 20 Nm
P0335	16719	Engine speed sender -G28 faulty	- Check engine speed sender =>Page 116
P0341	16725	Camshaft pos. sensor=>Sensor -G40 implausible signal	- Check Hall sender =>Page 175
P0342	16726	Camshaft pos. -sensor=>Sensor -G40, signal too low	
P0343	16727	Camshaft pos. -sensor=>Sensor -G40, signal too high	
P0404	16788	Exhaust gas recirculation system, control difference	- Check exhaust gas recirculation valve=>Page 25 , Final control diagnosis

Fault code		Fault text	Fault elimination
SAE	V.A.G		
P0411	16795	Secondary air system, through-flow defective	- Check secondary air pump motor => Page 25 , Final control diagnosis
			- Check secondary air inlet valve => Page 25 , Final control diagnosis
			- Check combi valve: => Repair group 26; Secondary air system
			- Check hoses and connecting pipes to/between components: => Repair group 26; Secondary air system
P0420	16804	Bank 1 catalyst system, efficiency too low	- Check catalyst: => Repair group 26; Removing and installing parts of the exhaust system

Copyright by Volkswagen AG. Volkswagen AG does not guarantee or accept any liability with respect to the correctness of information in this document. Copyright by Volkswagen AG. Reproduction, in part or whole, is permitted only unless authorised by Volkswagen AG. Copyright. Copying for private or commercial purposes, in part or whole, is not permitted unless authorised by Volkswagen AG.
satelettronica

Fault code		Fault text	Fault elimination
SAE	V.A.G		
P0440	16824	Tank venting system, faulty	- Check activated charcoal filter solenoid valve 1=> Page 25 , Final control diagnosis
P0441	16825	Tank breathing system, flow rate faulty	- Check hoses and connecting pipes from fuel tank to throttle valve control part: => Repair group 20; Activated charcoal filter system; Servicing activated charcoal filter system Servicing activated charcoal filter system
P0442	16826	Tank venting system, small leak detected	- Check activated charcoal filter system: => Repair group 20; Activated charcoal filter system; Servicing activated charcoal filter system Servicing activated charcoal filter system
P0455	16839	Tank venting valve large leak detected	

Fault code		Fault text	Fault elimination
SAE	V.A.G		
P0461	16845	Fuel status signal, implausible signal	- Check signal from fuel gauge sender: => Current flow diagrams, Electrical fault finding and Fitting locations
P0501	16885	Vehicle speed signal implausible	- Check speed signal => Page 150
P0506	16890	Idling speed control, Revs below specification	- Check throttle valve control part => Page 108
P0507	16891	Idling speed regulation above specifications	
P0532	16916	Air conditioning pressure sensor -G65 signal too low	- Check signal from high pressure sender (air conditioning) => Page 153 , Checking signals from and to A/C
P0533	16917	Air conditioning pressure sensor -G65 signal too high	
P0551	16935	Power assisted steering pressure switch -F88 implausible signal	- Check power assisted steering pressure switch signal => Page 165

Fault code		Fault text	Fault elimination
SAE	V.A.G		
P0560	16944	Voltage supply signal implausible	- Check voltage supply for control unit=> Page 143
P0562	16946	Voltage supply too low	- Check alternator: => Current flow diagrams, Electrical fault finding and Fitting locations
P0563	16947	Voltage supply too high	
P0571	16955	Brake light switch -F1)2)implausible signal	- Check brake light switch and brake pedal switch => Page 160

1) If this fault occurs the engine control unit switches on the EPC warning lamp in dash panel insert. Significance of EPC warning lamp => 2 .

2) The system monitors both brake light switch -F and brake pedal switch -F47.

Fault code		Fault text	Fault elimination
SAE	V.A.G		
P0600	16984	Drive train data bus, message missing	- Check data bus => Page 168
P0601	16985	Control unit defective	- Replace engine control unit => Page 145

Protected by copyright. Copyright by Volkswagen AG.
Volkswagen AG does not guarantee or accept any liability with respect to the correctness of information in this document. Copyright by Volkswagen AG.
Transmission to third parties or publication in whole or in part is not permitted unless authorised by Volkswagen AG.
satelettronica

Fault code		Fault text	Fault elimination
P0603	16987	Control unit defective	
P0604	16988	Control unit defective	
P0605	16989	Control unit defective	
P0606	16990	Control unit defective	
P0645	17029	Air conditioning input/output	- Check signals to and from air conditioning => Page 153
P0656	17040	Fuel consumption signal, fault in electrical circuit	- Check consumption signal: => Current flow diagrams, Electrical fault finding and Fitting locations

4 - Fault table: SAE P1 codes

4.1 - Fault table: SAE P1 codes

Notes:

- The fault code overview is listed according to SAE or V.A.G code.
- Erase fault memory after rectifying fault =>Page 10 .

Fault code		Fault text	Fault elimination
SAE	V.A.G		
P1102	17510	Bank 1, probe 1 heating element circuit, short to positive	- Check Lambda probe heating before catalyst => Page 95
P1103	17511	Bank1, probe 1 heating element circuit, performance too low	- Check Lambda probe and Lambda regulation before catalyst => Page 130
P1105	17513	Bank1, probe 2 heating element circuit, short to positive	- Check Lambda probe heating after catalyst => Page 98
P1111	17519	Lambda control Bank 1 system too lean	- Check Lambda probe and Lambda control before catalyst => Page 130
P1112	17520	Lambda control Bank 1 system too rich	
P1113	17521	Bank1, probe 1 internal resistance too high	- Check Lambda probe heating before catalyst => Page 95

Fault code		Fault text	Fault elimination
SAE	V.A.G		
P1114	17522	Bank1, probe 2 internal resistance too high	- Check Lambda probe heating after catalyst => Page 98
P1115	17523	Bank 1, probe 1 heating current circuit short to earth	- Check Lambda probe heating before catalyst => Page 95
P1116	17524	Bank 1, probe 1 heating element circuit open circuit	
P1117	17525	Bank1, probe 2 heating element circuit short to earth	- Check Lambda probe heating after catalyst => Page 98
P1118	17526	Bank1, probe 2 heating element open circuit	
P1127	17535	Bank 1, mixture adaption (mult.) system too rich	- Check fuel pressure regulator and holding pressure => Page 125
			- Check injectors =>Page 118

Volkswagen AG does not guarantee or accept any liability with respect to the correctness of information in this document. Copyright by Volkswagen AG. Copyright. Copying for private or commercial purposes, in part or in whole, is not permitted unless authorised by Volkswagen AG.
satelettronica

			- Check activated charcoal filter solenoid valve 1 => Page 25 , final control diagnosis

Fault code		Fault text	Fault elimination
SAE	V.A.G		
P1128	17536	Bank 1 mixture adaption (mult.) system too lean	- Check fuel pressure regulator and holding pressure => Page 125
			- Check injectors =>Page 118
			- Check intake system for leaks => Page 128
			- Check fuel pump: => Repair group 20; Removing and installing parts of fuel system; Checking fuel pump Checking fuel pump
			- Check exhaust system for leaks: => Repair group 26; Removing and installing parts of exhaust system
			- Check secondary air system for leaks: => Repair group 26; Secondary air system
			- Check vacuum pipes for leaks

Fault code		Fault text	Fault elimination
SAE	V.A.G		
P1136	17544	Bank 1, mixture adaption (add.) system too lean	- Check fuel pressure regulator and holding pressure => Page 125
			- Check injectors =>Page 118
			- Check intake system for leaks => Page 128
			- Check fuel pump: => Repair group 20; Removing and installing parts of fuel system; Checking fuel pump Checking fuel pump
			- Check exhaust system for leaks: => Repair group 26; Removing and installing parts of exhaust system
			- Check secondary air system for leaks: => Repair group 26; Secondary air system
			- Check vacuum pipes for leaks

Note:

add. = additive means, the fault only has an effect at idling speed.

Fault code		Fault text	Fault elimination
SAE	V.A.G		
P1137	17545	Bank 1, mixture adaption (add.) system too rich	- Check fuel pressure regulator and holding pressure => Page 125
			- Check injectors =>Page 118
			- Check activated charcoal filter solenoid valve 1 => Page 25 , final control diagnosis
P1141	17549	Load determination, implausible value	- Check throttle valve control part => Page 108

Copyright by Volkswagen AG. Volkswagen AG does not guarantee or accept any liability with respect to the correctness of information in this document. Copying for private or commercial purposes, in part or in whole, is not permitted unless authorised by Volkswagen AG.
satelettronica

Fault code		Fault text	Fault elimination
P1142	17550	Load determination, level not reached	- Check accelerator pedal position sender: => Repair group 20; Electronic power control (EPC); Checking accelerator pedal position sender Checking accelerator pedal position sender
P1143	17551	Load determination, level exceeded	- Check intake system for leaks => Page 128

Note:

add. = additive means, the fault only has an effect at idling speed.

Fault code		Fault text	Fault elimination
SAE	V.A.G		
P1149	17557	Lambda control bank 1 implausible control value	- Check Lambda probe and Lambda control before catalyst => Page 130
P1171	17579	Angle sens. 2 for throt.valve drive -G188, implausible signal 1)	- Check throttle valve control part => Page 108
P1172	17580	Angle sens. 2 for throt.valve drive -G188, Signal too low 1)	
P1173	17581	Angle sens. 2 for throt.valve drive -G188, Signal too high 1)	

1) If this fault occurs the engine control unit switches on the EPC warning lamp in dash panel insert. Significance of EPC warning lamp => 2 .

Fault code		Fault text	Fault elimination
SAE	V.A.G		
P1176	17584	Bank 1, Lambda correction after cat. Control limit reached	- Check fuel pressure regulator and holding pressure => Page 125
			- Check injectors =>Page 118
			- Check intake system for leaks => Page 128
			- Check Lambda probe and Lambda regulation before catalyst => Page 130
			- Check Lambda probe and Lambda regulation after catalyst => Page 135
			- Check activated charcoal filter solenoid valve 1 => Page 25 , final control diagnosis

Continued =>next page

Fault code		Fault text	Fault elimination
SAE	V.A.G		
P1176	17584	Bank 1, Lambda correction after catalyst, control limit reached	- Check fuel pump: => Repair group 20; Removing and installing parts of fuel system; Checking fuel pump Checking fuel pump
			- Check secondary air system for leaks: => Repair group 26; Secondary air system
P1196	17604	Bank 1, probe 1 heating current circuit electrical fault	- Check Lambda probe heating before catalyst => Page 95

satelettronica

Fault code		Fault text	Fault elimination
P1198	17606	Bank 1, probe 2 heating current circuit electrical fault	- Check Lambda probe heating after catalyst => Page 98

Fault code		Fault text	Fault elimination
SAE	V.A.G		
P1213	17621	Injector Cyl. 1 -N30 short to positive	- Check injectors =>Page 118
P1214	17622	Injector Cyl. 2 -N31 short to positive	
P1215	17623	Injector Cyl. 3 -N32 short to positive	
P1216	17624	Injector Cyl. 4 -N33 short to positive	
P1225	17633	Injector Cyl. 1 -N30 short to earth	
P1226	17634	Injector Cyl. 2 -N31 short to earth	
P1227	17635	Injector Cyl. 3 -N32 short to earth	
P1228	17636	Injector Cyl. 4 -N33 short to earth	
P1237	17645	Injector Cyl. 1 -N30 open circuit	
P1238	17646	Injector Cyl. 2 -N31 open circuit	
P1239	17647	Injector Cyl. 3 -N32 open circuit	
P1240	17648	Injector Cyl. 4 -N33 open circuit	

Fault code		Fault text	Fault elimination
SAE	V.A.G		
P1250	17658	Fuel level too low	- Fill fuel tank
			- Check signal from fuel gauge sender: => Current flow diagrams, Electrical fault finding and Fitting locations
P1325	17733	Cylinder 1 knock control, control limit reached	- Fill fuel tank with at least 95 RON
P1326	17734	Cylinder 2 knock control, control limit reached	- Check knock sensor => Page 181
P1327	17735	Cylinder 3 knock control, control limit reached	- Loosen knock sensor and tighten again to 20 Nm
P1328	17736	Cylinder 4 knock control, control limit reached	- Eliminate cause for abnormal engine running noises

Fault code		Fault text	Fault elimination
SAE	V.A.G		
P1335	17743	Engine torque control 2 adaption at limit1)	- Check throttle valve control part => Page 108
			- Check intake air temperature sender => Page 104
			- Check coolant temperature sender => Page 113
			- Check intake system for leaks => Page 128
			- Check pedal position sender: => Repair group 20; Electronic power control (EPC); Checking pedal position sender Checking pedal position sender

1) If this fault occurs the engine control unit switches on the EPC warning lamp in dash panel insert. Significance of EPC warning lamp => 2 .

satelettronica

Fault code		Fault text	Fault elimination
SAE	V.A.G		
P1336	17744	Engine torque control adaption at limit	- Check throttle valve control part => Page 108
			- Check intake air temperature sender => Page 104
			- Check coolant temperature sender => Page 113
			- Check intake system for leaks => Page 128 - Check pedal position sender: => Repair group 20; Electronic power control (EPC); Checking pedal position sender Checking pedal position sender

1) If this fault occurs the engine control unit switches on the EPC warning lamp in dash panel insert. Significance of EPC warning lamp => 2 .

Fault code		Fault text	Fault elimination
SAE	V.A.G		
P1337	17745	Bank 1, camshaft position sensor => -G40 Short to earth	- Check Hall sender => Page 175
P1338	17746	Bank 1, camshaft position sensor => -G40 Open circuit / short to positive	
P1340	17748	Camshaft position/crankshaft position sensor Wrong allocation	- Check engine speed sender =>Page 116
			- Check Hall sender => Page 175
			- Check timing: => Repair group 15; Removing and installing cylinder head, Removing and installing toothed belt, Tensioning

Fault code		Fault text	Fault elimination
SAE	V.A.G		
P1356	17764	Ignition circuit cylinder 1, short to positive 1)	- Check ignition leads and spark plugs => Page 171
P1357	17765	Ignition circuit cylinder 1, short to earth 1)	- Check ignition transformer => Page 177
P1359	17767	Ignition circuit cylinder 2, short to positive 2)	- Check misfiring recognition => Page 183
P1360	17768	Ignition circuit cylinder 2 short to earth 2)	
P1386	17794	Control unit defective, knock regulation	- Renew engine control unit => Page 145
P1387	17795	Control unit defective	
P1388	17796	Control unit defective, EPC monitor 3)	

1) The ignition circuit cylinder 1 produces the high tension voltage for cylinders 1 and 4 because a double ignition coil with voltage distribution is installed. Both are always ignited at the same time. One cylinder is just before TDC on the compression stroke and the other cylinder is on the exhaust stroke.

2) The ignition circuit cylinder 2 produces the high tension voltage for cylinders 2 and 3 because a double ignition coil with voltage distribution is installed. Both are always ignited at the same time. One cylinder is just before TDC on the compression stroke and the other cylinder is on the exhaust stroke.

3) If this fault occurs the engine control unit switches on the EPC warning lamp in the dash panel insert. Significance of EPC warning lamp => 2 .

satelettronica

Fault code		Fault text	Fault elimination
SAE	V.A.G		
P1397	17805	Sender wheel for engine speed, adaption limit reached	- Check engine speed sender =>Page 116
			- Remove engine speed sender and check sender wheel is fitted correctly and not damaged
P1398	17806	Engine speed signal, TD short to earth	- Check speed signal => Page 152
P1399	17807	Engine speed signal (for rev. counter), short to positive	
P1401	17809	Exhaust gas recirculation valve -N18 short to earth	- Check exhaust gas recirculation valve=>Page 25 , Final control diagnosis
P1402	17810	Valve for exhaust gas recirculation -N18 short to positive	
P1403	17811	Exhaust gas recirculation system control difference	

Fault code		Fault text	Fault elimination
SAE	V.A.G		
P1409	17817	Tank venting valve -N80 electrical fault in current circuit	- Check activated charcoal filter solenoid valve 1=> Page 25 , Final control diagnosis
P1410	17818	Tank breathing valve -N80 short to positive	
P1421	17829	Secondary air inlet valve -N112 short to earth	- Check secondary air inlet valve => Page 25 , Final control diagnosis
P1422	17830	Secondary air inlet valve -N112 short to positive	
P1423	17831	Bank 1, secondary air system, flow rate insufficient	- Check secondary air system: => Repair group 26; Secondary air system
P1424	17832	Bank 1, secondary air system, leak detected	- Check pipes and pipe connections to and between components: => Repair group 26; Secondary air system

Fault code		Fault text	Fault elimination
SAE	V.A.G		
P1425	17833	Tank venting valve -N80 short to earth	- Check activated charcoal filter solenoid valve 1=> Page 25 , Final control diagnosis
P1426	17834	Tank venting valve -N80, open circuit	
P1432	17840	Secondary air inlet valve -N112 open circuit	- Check secondary air inlet valve => Page 25 , Final control diagnosis
P1434	17842	Secondary air pump relay -J299, short to positive	
P1435	17843	Secondary air pump relay -J299, short to earth	
P1440	17848	Exhaust gas recirculation valve -N18 open circuit	- Check exhaust gas recirculation valve=>Page 25 , Final control diagnosis
P1442	17850	Exhaust gas recirculation potentiometer -G212, signal too high	- Check exhaust gas recirculation potentiometer: => Repair group 26; Exhaust gas recirculation system
P1443	17851	Exhaust gas recirculation potentiometer -G212, signal too low	

Fault code		Fault text	Fault elimination
SAE	V.A.G		

Protected by copyright. Copying for private or commercial purposes, in part or in whole is not permitted unless authorised by Volkswagen AG. Volkswagen AG does not guarantee or accept any liability with respect to the correctness of information in this document. Copyright by Volkswagen AG.
satelectronica

Fault code		Fault text	Fault elimination
P1500	17908	Fuel pump relay -J17 fault in electrical circuit	- Check fuel pump relay =>Page 25 , Final control diagnosis
P1501	17909	Fuel pump relay -J17, Short to earth	
P1502	17910	Fuel pump relay -J17, short to positive	
P1503	17911	Load signal alternator terminal DF Implausible signal	- Check wiring to alternator: => Current flow diagrams, Electrical fault finding and Fitting locations
P1507	17915	Idling speed system learnt value, lower level reached	- Perform idling speed check => Page 129
P1508	17916	Idling speed system learnt value, upper level reached	- Check intake system for leaks => Page 128

Fault code		Fault text	Fault elimination
SAE	V.A.G		
P1512	17920	Intake manifold changeover valve -N156 short to positive	- Check intake manifold changeover valve=> Page 25 , Final control diagnosis
P1515	17923	Intake manifold changeover valve -N156 short to earth	
P1516	17924	Intake manifold changeover valve -N156 open circuit	
P1541	17949	Fuel pump relay -J17 open circuit	- Check fuel pump relay=>Page 25 , Final control diagnosis
P1542	17950	Angle sender for throttle valve drive -G187 implausible signal1)	- Check throttle valve control part => Page 108
P1543	17951	Angle sender for throttle valve drive -G187 signal too low 1)	
P1544	17952	Angle sender for throttle valve drive -G187 signal too high 1)	
P1545	17953	Throttle valve control malfunction 1)	
P1558	17966	Throttle valve drive -G186, fault in electrical circuit 1)	

1) If this fault occurs the engine control unit switches on the EPC warning lamp in dash panel insert. Significance of EPC warning lamp => 2 .

Fault code		Fault text	Fault elimination
SAE	V.A.G		
P1559	17967	Throttle valve control part -J338 Fault in basic setting1)	- Adapt engine control unit to throttle valve control part => Page 147
P1560	17968	Maximum engine revs surpassed	- Repair mechanical damage
P1564	17972	Throttle valve control part -J338 Low voltage at base setting1)	- Check battery, charge if necessary: => Electrical system; Repair group 27
			- Erase learnt values and adapt engine control unit to throttle valve control part => Page 147
P1565	17973	Throttle valve control part -J338 Lower limit stop is not reached1)	- Erase learnt values and adapt engine control unit to throttle valve control part => Page 147

Protected by copyright. Copyright by Volkswagen AG.
Volkswagen AG does not guarantee or accept any liability with respect to the correctness of information in this document. Copyright by Volkswagen AG.
This document, in part or in whole, is not permitted unless authorised by Volkswagen AG.
satelettronica

Fault code		Fault text	Fault elimination
P1568	17976	Throttle valve control part -J338 mechanical fault1)	- Check throttle valve control part => Page 108

1) If this fault occurs the engine control unit switches on the EPC warning lamp in dash panel insert. Significance of EPC warning lamp => 2 .

Fault code		Fault text	Fault elimination
SAE	V.A.G		
P1570	17978	Engine control unit electronically locked	- Adapt engine control unit to electronic immobilizer: => Electrical system self-diagnosis; Repair group 01; Immobilizer self-diagnosis; Procedure after changing engine control unit (adaption) Immobilizer self-diagnosis; Procedure after changing engine control unit (adaption)
P1579	17987	Throttle valve control part -J338 Adaption not started 1)	- Erase learnt values and adapt engine control unit to throttle valve control part => Page 147
			- Check throttle valve control part => Page 108

1) If this fault occurs the engine control unit switches on the EPC warning lamp in dash panel insert. Significance of EPC warning lamp => 2 .

Fault code		Fault text	Fault elimination
SAE	V.A.G		
P1589	17997	Temperature control knob potentiometer -G267 Short to earth1)	- Check temperature control knob potentiometer: => Heating, Air conditioning; Repair group 87
P1590	17998	Temperature control knob potentiometer -G267 Open circuit1)	
P1602	18010	Voltage supply term. 30, Voltage too low	- Check voltage supply for control unit => Page 143
			- Check alternator and battery voltage, charge battery: => Electrical system; Repair group 27

1) These faults only concern vehicles with a standard heating system or manual air conditioning.

Fault code		Fault text	Fault elimination
SAE	V.A.G		
P1603	18011	Control unit defective, EPC monitor1)	- Renew engine control unit => Page 145
P1604	18012	Control unit defective 1)	
P1608	18016	Steering angle signal Fault message from steering angle sender2)	- Check signal from power assisted steering pressure switch => Page 165
P1609	18017	Crash cut-off activated	- Erase fault memory => Page 10 , Interrogating and erasing fault memory
P1612	18020	Exhaust control unit, Incorrect Coding	- Code engine control unit => Page 146
P1623	18031	Drive train data bus, No communication	- Check data bus => Page 168
P1625	18033	Drive train data bus, Implausible message from gearbox CU	- Check coding => Page 147 , Coding variants for engine control unit

satelettronica

Fault code		Fault text	Fault elimination
P1626	18034	Drive train data bus, No communication from gearbox CU	- Check data bus =>Page 168

1) If this fault occurs the engine control unit switches on the EPC warning lamp in dash panel insert. Significance of EPC warning lamp => 2 .

2) Fault in control unit software refers to power assisted steering pressure switch (F88).

Fault code		Fault text	Fault elimination
SAE	V.A.G		
P1630	18038	Accelerator position sender -G79, Signal too low1)	- Check accelerator pedal: => Repair group 20; Electronic Engine Power Control (E-Gas); Check accelerator pedal position sender Check accelerator pedal position sender
P1631	18039	Accelerator position sender -G79, Signal too high 1)	
P1633	18041	Accelerator position sender 2 -G185, Signal too low 1)	
P1634	18042	Accelerator position sender 2 -G185, signal too high 1)	
P1636	18044	Drive train data bus, No message from airbag CU	- Check data bus => Page 168

1) If this fault occurs the engine control unit switches on the EPC warning lamp in dash panel insert. Significance of EPC warning lamp => 2 .

Fault code		Fault text	Fault elimination
SAE	V.A.G		
P1639	18047	Accelerator pedal position sender 1/2 -G79 +G185, Implausible signal1)	- Check accelerator position sender: => Repair group 20; Electronic Power Control (E-Gas); Check accelerator pedal position sender Check accelerator pedal position sender
P1640	18048	Control unit defective1)	- Replace engine control unit (J220) => Page 145
P1648	18056	Drive train data bus defective	- Check data bus => Page 168
P1649	18057	Drive train data bus, No messages from ABS CU	
P1650	18058	Drive train data bus, No message from combi-instrument	

1) If this fault occurs the engine control unit switches on the EPC warning lamp in dash panel insert. Significance of EPC warning lamp => 2 .

Fault code		Fault text	Fault elimination
SAE	V.A.G		
P1656	18064	Air conditioning input/output, short to earth	- Check signals to and from air conditioning system => Page 153
P1657	18065	Air conditioning input/output, short to positive	
P1676	18084	Electr. throttle control fault lamp -K132 Electrical fault in current circuit1)	- Check data bus => Page 168
P1677	18085	Electr. throttle control fault lamp -K132 Short to positive1)	

Protected by copyright. Copying for private or commercial purposes, in part or in whole, is not permitted unless authorised by Volkswagen AG. Volkswagen AG does not guarantee or accept any liability with respect to the correctness of information in this document. Copyright by Volkswagen AG.
satelettronica

P1678	18086	Electr. throttle control fault lamp -K132 Short to earth1)	
P1679	18087	Electr. throttle control fault lamp -K132 Open circuit1)	

1) If this fault occurs the engine control unit switches on the EPC warning lamp in dash panel insert. Significance of EPC warning lamp => 2 .

Fault code		Fault text	Fault elimination
SAE	V.A.G		
P1680	18088	Reset window, emergency run active	- Check throttle valve control part => Page 108
			- Check accelerator pedal position sender: => Repair group 20; Electronic power control (EPC); Check accelerator pedal position sender Check accelerator pedal position sender
P1853	18261	CAN bus implausible message from ABS CU	- Check data bus =>Page 168

5 - Final control diagnosis

5.1 - Final control diagnosis

5.2 - Performing final control diagnosis

The final control diagnosis activates the following components in the stated sequence:

1. Fuel pump relay -J17
1. Solenoid valve 1 for activated charcoal filter -N80
3. Exhaust gas recirculation valve -N18
4. Intake manifold change-over valve -N156
5. Secondary air inlet valve -N112
6. Secondary air pump relay -J299

Special tools, workshop equipment, testers, measuring instruments and auxiliary items required

- Hand multimeter V.A.G 1526 or multimeter V.A.G 1715
- Diode test lamp V.A.G 1527
- Fault reader V.A.G 1551 (or vehicle system tester V.A.G 1552) with cable V.A.G 1551/3
- Adapter set V.A.G 1594
- Test box V.A.G 1598/31
- Current flow diagram

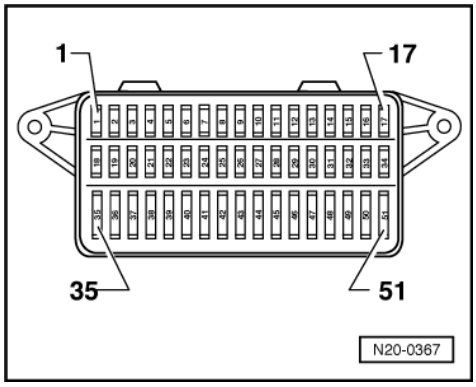

Protected by copyright. Copyright by Volkswagen AG.
Copyright by Volkswagen AG. Volkswagen AG does not guarantee or accept any liability with respect to the correctness of information in this document. Copying for private or commercial purposes, in part or in whole, is not permitted unless authorised by Volkswagen AG.
satelettronica

Check conditions

- -> The fuses 1, 31, 36 and 40 must be OK.

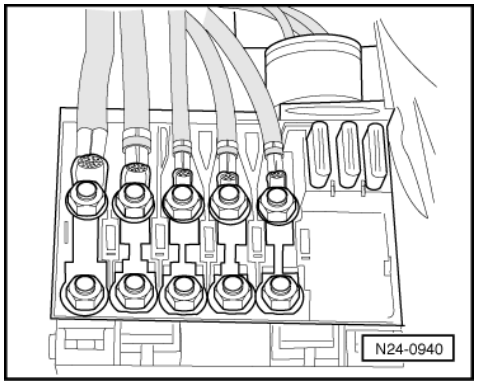

- -> The main fuses must be OK.
- The battery voltage must be at least 11.5 V.
- Earth connection in plenum chamber OK.
- All electrical consumers, e.g. lights and rear window heating must be switched off.
- If the vehicle is equipped with an air conditioning system, this must be switched off.

Notes:

- All functions of V.A.G 1551/1552 can also be carried out with the new tester VAS 5051. Connecting VAS 5051 => Page 6 .
- The final control diagnosis can only be carried out if the engine is stationary and ignition switched on.
- The final control diagnosis will be broken off if the engine is started or a rotational impulse is recognised.
- During the final control diagnosis, the individual final controls are activated 50 times (relay for secondary air pump -J299 10 seconds) unless the ⇒ key is pressed before hand to switch manually to the next final control.
- The final controls are checked acoustically or by touching.
- If it is necessary to repeat the final control diagnosis, without first running the engine briefly, switch the ignition off for approx. 2 seconds.
- The electric fuel pump will run during the complete final control diagnosis.

Work sequence

- Connect the fault reader V.A.G 1551 (V.A.G 1552). Then switch ignition on and select engine control unit with the "Address word" 01.
  (Connecting fault reader and selecting engine control unit => Page 4 .)

-> Indicated on display:

```
Rapid data transfer      HELP
Select function XX
```

- Operate fault reader taking into account the information on the display:
- Press keys 0 and 3 for the function "Final control diagnosis".

-> Indicated on display:

```
Rapid data transfer      Q
03 Final control diagnosis
```

Activating fuel pump relay (J17):

- Confirm input with Q key.

-> Indicated on display:

```
Final control diagnosis
Fuel pump relay-J17
```

Protected by copyright. Copying for private or commercial purposes, in part or in whole, is not permitted unless authorised by Volkswagen AG. Volkswagen AG does not guarantee or accept any liability with respect to the correctness of information in this document. Copyright by Volkswagen AG.
satelettronica

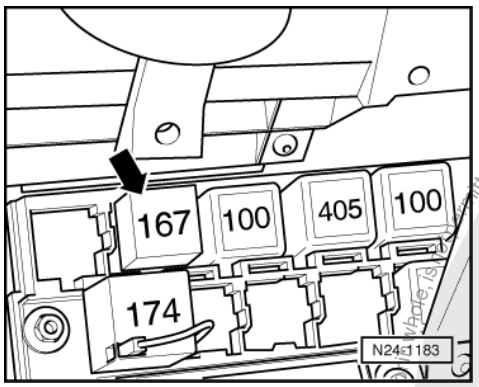

-> The fuel pump relay (on relay plate, relay position 2) -arrow- must click until the next final control is activated by pressing the ⇒button (max. 50 times).

Note:

During the activation of the fuel pump relay the fuel pump must be heard to run at intervals.

If the relay does not click:

- Proceed with final control diagnosis until completed.
- Switch off ignition.
- Check fuel pump relay (J17):

=> Current flow diagrams, Electrical fault finding and Fitting locations

Notes:

- If tools are necessary to pull relays or control units out of the relay plate, first disconnect battery earth strap.
- Before disconnecting battery earth strap obtain code for radios with anti-theft coding.

Activating activated charcoal filter solenoid valve 1 (N80):

- Press ⇒key.

-> Indicated on display:

```
Final control diagnosis
Activ. charcoal filter solenoid valve
1     -N80
```

The activated charcoal filter solenoid valve 1 must click (maximum 50 times) until you activate the next final control by pressing the ⇒key.

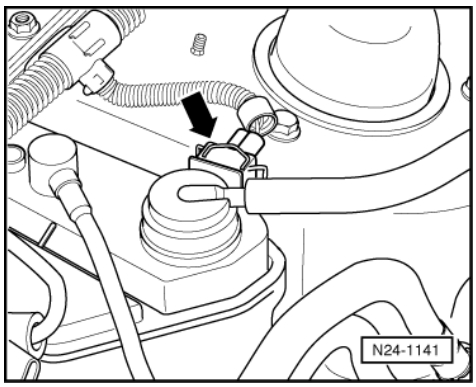

If the solenoid valve does not click:

- -> Pull 2-pin connector off solenoid valve 1 (N80) -arrow-.

Copyright by Volkswagen AG. Volkswagen AG does not guarantee or accept any liability with respect to the correctness of information in this document. Copying for private or commercial purposes, in part or in whole, is not permitted unless authorised by Volkswagen AG.
satelettronica

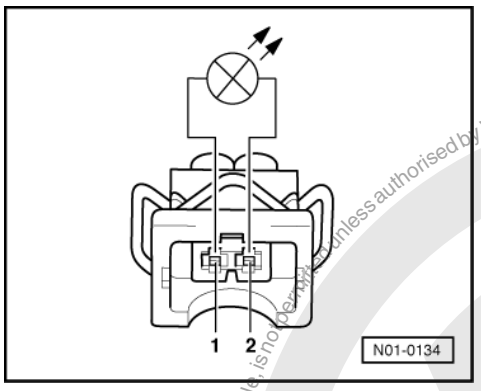

- -> Connect diode test lamp V.A.G 1527 using adapter cables from V.A.G 1594 to detached connector. The LED must flash

LED flashes:

- Proceed with final control diagnosis until completed.
- Switch off ignition.
- Replace solenoid valve 1 (N80):

=> Repair group 20; Activated charcoal filter system; Servicing parts of activated charcoal filter system Activated charcoal filter system Servicing parts of activated charcoal filter system

- Interrogate fault memory, if necessary, repair any faults and then erase fault memory => Page 10 , interrogating and erasing fault memory.

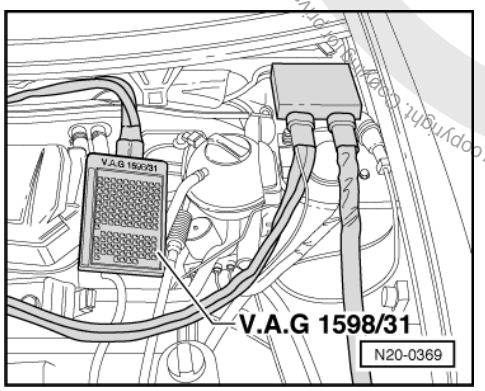

LED does not flash:

- Proceed with final control diagnosis until completed.
- Switch off ignition.
- Remove left cover for plenum chamber.
- -> Connect test box V.A.G 1598/31 to control unit wiring harness. The engine control unit remains disconnected.

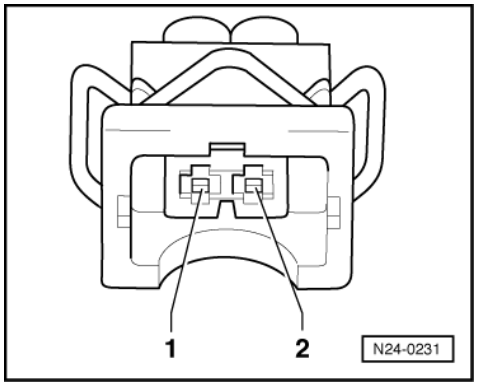

Protected by copyright. Copying for private or commercial purposes, in part or in whole, is not permitted unless authorised by Volkswagen AG. Volkswagen AG does not guarantee or accept any liability with respect to the correctness of information in this document. Copyright by Volkswagen AG.
satelettronica

- -> Check wire between test box and 2-pin connector for open circuit using current flow diagram:
  Contact 2 and test box socket 61
  Wire resistance: max. 1.5 ω
- Check wiring additionally for short to vehicle earth or battery positive.
  Specification: ∞ω
- Check wire between 2 pin connector contact 1 and fuel pump relay (J17) for open circuit using current flow diagram.
  Wire resistance: max. 1.5 ω

If no fault is detected in the wiring:

- Replace engine control unit
  => Page 145 .

Activate exhaust gas recirculation valve (N18):

- Press ⇒key.

-> Indicated on display:

```
Final control diagnosis
Exhaust gas recirculation valve -N18
```

The exhaust gas recirculation valve must click (max. 50 times) until the ⇒ key is pressed to activate the next final control.

If the exhaust gas recirculation valve does not click:

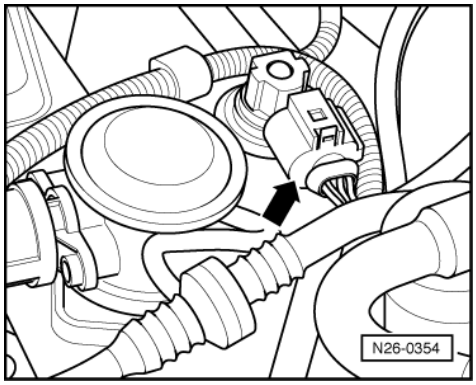

- -> Pull 6-pin connector off exhaust gas recirculation valve (N18) -arrow-.

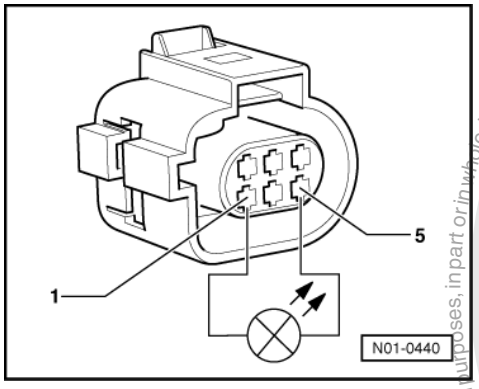

- -> Connect diode test lamp V.A.G 1527 using adapter cables from V.A.G 1594 to contacts 1 and 5 of connector.
  The LED must flash

LED flashes:

- Proceed with final control diagnosis until completed.
- Switch off ignition.

satelettronica
Protected by copyright. Copying for private or commercial purposes, in part or in whole, is not permitted unless authorised by Volkswagen AG. Volkswagen AG does not guarantee or accept any liability with respect to the correctness of information in this document. Copyright by Volkswagen AG.

- Renew exhaust gas recirculation valve (N18):

=> Repair group 26; Exhaust gas recirculation system; Servicing parts of the exhaust gas recirculation system Exhaust gas recirculation system Servicing parts of the exhaust gas recirculation system

- Interrogate fault memory, if necessary, repair any faults and then erase fault memory => Page 10 , interrogating and erasing fault memory.
- Erase the learnt values and adapt the engine control unit again=> Page 147 .

LED does not flash:

- Proceed with final control diagnosis until completed.
- Switch off ignition.

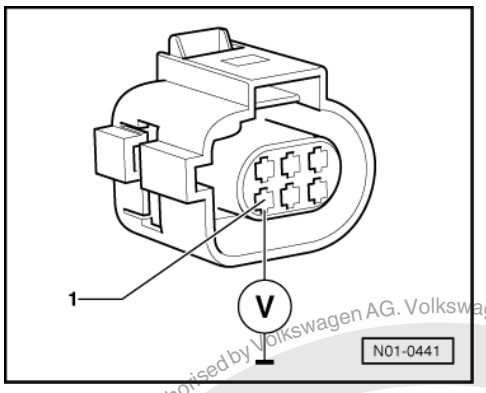

- -> Connect multimeter to measure voltage using aux. cables from V.A.G 1594 to contacts 1 (positive) and earth of connector.
- Switch on ignition.
  Specification: min. 11.5 V
- Switch off ignition.

If the specification is not attained:

- Check wire between 6-pin connector contact 1 and voltage supply relay for Simos control unit (J363), on relay plate relay position 4, for open circuit using current flow diagram.
  Wire resistance: max. 1.5 ω

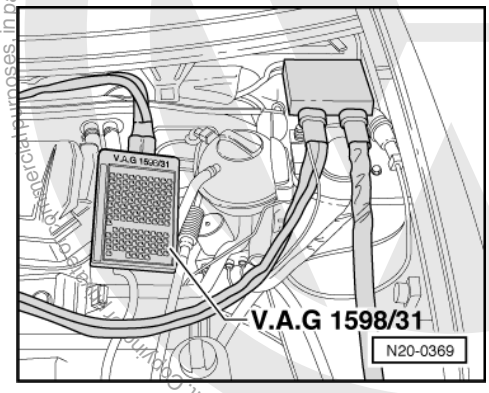

If the specification is obtained:

- Remove left cover for plenum chamber.
- -> Connect test box V.A.G 1598/31 to control unit wiring harness. The engine control unit remains disconnected.

satelettronica

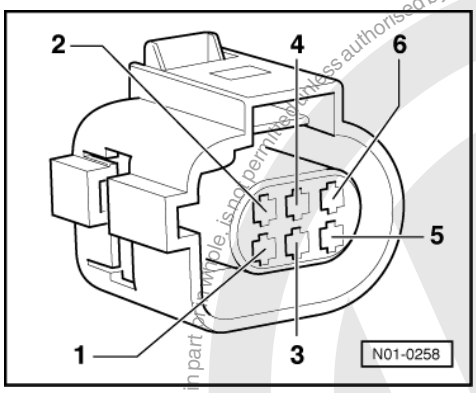

- -> Check wire between test box and 6-pin connector for open circuit using current flow diagram:
  Contact 5 and test box socket 115
  Wire resistant: max. 1.5 ω
- Check wiring additionally for short to vehicle earth or battery positive.
  Specification: ∞ω

If no wiring fault is detected:

- Replace engine control unit
  => Page 145 .

Activating intake manifold change-over valve (N156):

- Press ⇒key.

-> Indicated on display:

```
Final control diagnosis
Intake manifold change-over valve -N156
```

The variable intake manifold change-over valve must click (max. 50 times) until the next final control is activated by pressing the ⇒key.

Note:

Checking intake manifold change-over => Page 141 .

If the solenoid valve does not click:

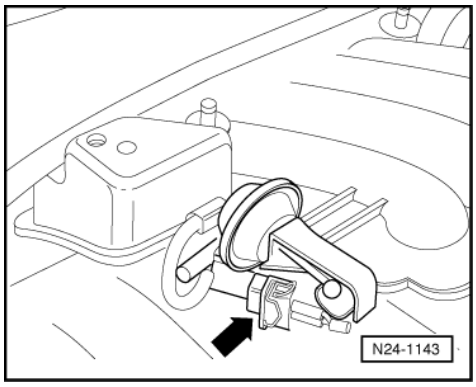

- -> Pull 2-pin connector off variable intake manifold change-over valve (N156) -arrow-.

Volkswagen AG. Volkswagen AG does not guarantee or accept any liability with respect to the correctness of information in this document. Copyright by Volkswagen AG. Protected by copyright. Copying for private or commercial purposes, in part or whole, is not permitted unless authorised by Volkswagen AG.
satelettronica

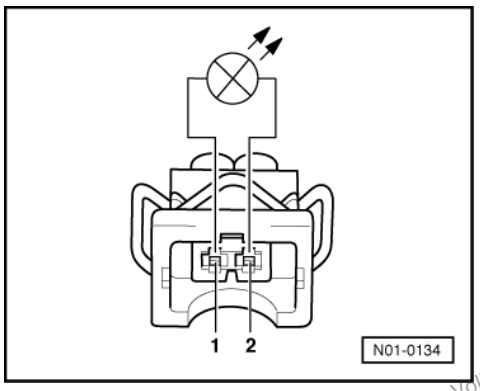

- -> Connect diode test lamp V.A.G 1527 using adapter cables from V.A.G 1594 to detached connector. The LED must flash

LED flashes:

- Proceed with final control diagnosis until completed.
- Switch off ignition.
- Renew intake manifold change-over valve (N156) Page 87 , item 12 .
- Interrogate fault memory, if necessary, repair any faults and then erase fault memory => Page 10 , interrogating and erasing fault memory.

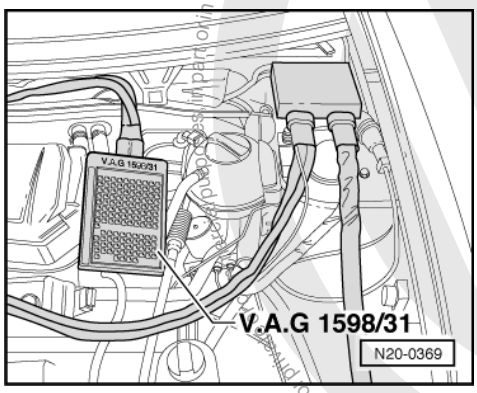

LED does not flash:

- Proceed with final control diagnosis until completed.
- Switch off ignition.
- Remove left cover for plenum chamber.
- -> Connect test box V.A.G 1598/31 to control unit wiring harness. The engine control unit remains disconnected.

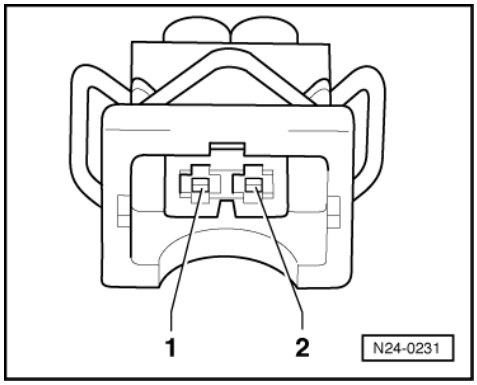

- -> Check wire between test box and 2-pin connector for open circuit using current flow diagram:
  Contact 2 and test box socket 117
  Wire resistance: max. 1.5 ω
- Check wiring additionally for short to vehicle earth or battery positive.

satelettronica

Specification: ∞ω
- Check wire between 2 pin connector contact 1 and fuel pump relay (J17) for open circuit using current flow diagram.
  Wire resistance: max. 1.5 ω

If no wiring fault is detected:

- Replace engine control unit
  => Page 145 .

Activating secondary air inlet valve (N112):

- Press ⇒key.

-> Indicated on display:

```
Final control diagnosis
Secondary air inlet valve -N112
```

The secondary air inlet valve must click (max. 50 times) until the next final control is activated by pressing the ⇒ key.

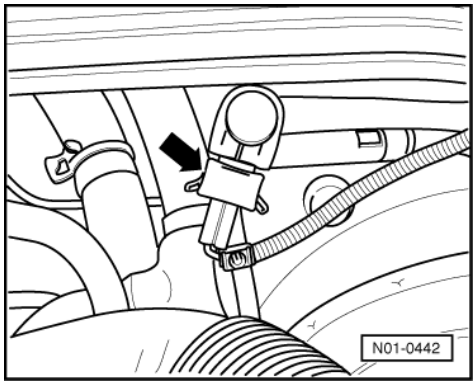

If the valve does not click:

- -> Pull 2-pin connector off secondary air intake valve (N112) -arrow-.

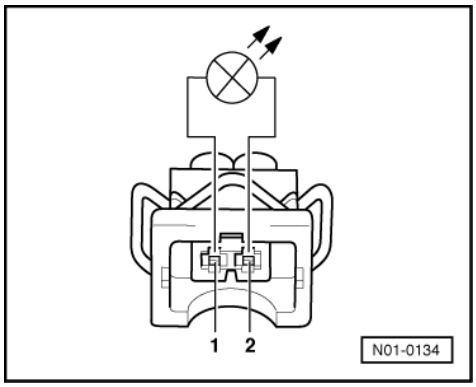

- -> Connect diode test lamp V.A.G 1527 using adapter cables from V.A.G 1594 to detached connector.
  The LED must flash

LED flashes:

- Proceed with final control diagnosis until completed.
- Switch off ignition.
- Replace secondary air inlet valve (N112):

Protected by copyright. Copying for private or commercial purposes, in part or in whole, is not permitted unless authorised by Volkswagen AG. Volkswagen AG does not guarantee or accept any liability with respect to the correctness of information in this document. Copyright by Volkswagen AG.
satelettronica

=> Repair group 26; Secondary air system; Removing and installing parts of the secondary air system Secondary air system Removing and installing parts of the secondary air system

- Interrogate fault memory, if necessary, repair any faults and then erase fault memory => Page 10 , interrogating and erasing fault memory.

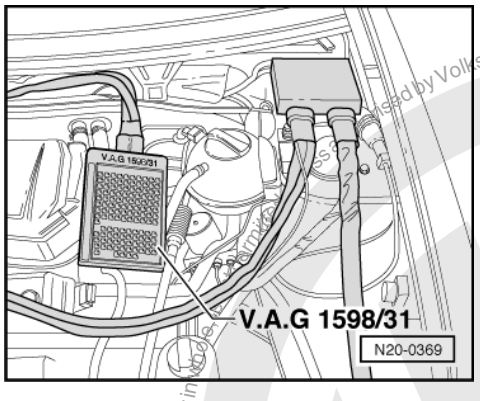

LED does not flash:

- Proceed with final control diagnosis until completed.
- Switch off ignition.
- Remove left cover for plenum chamber.
- -> Connect test box V.A.G 1598/31 to control unit wiring harness. The engine control unit remains disconnected.

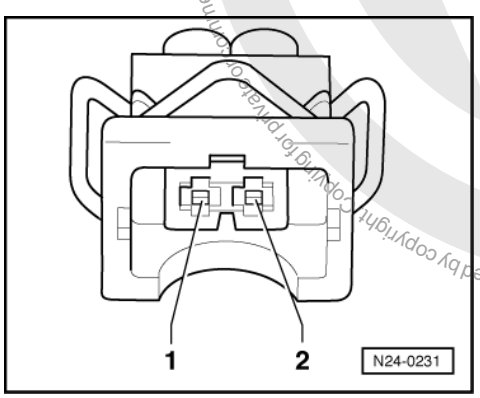

- -> Check wiring between test box and 2-pin connector for open circuit using current flow diagram:
  Contact 2 and test box socket 71
  Wire resistance: max. 1.5 ω
- Check wiring additionally for short to vehicle earth or battery positive.
  Specification: ∞ω

- Check wire between 2 pin connector contact 1 and fuel pump relay (J17) for open circuit using current flow diagram.
  Wire resistance: max. 1.5 ω

If no wiring fault is detected:

- Replace engine control unit
  => Page 145 .

Activating secondary air pump relay (J299):

Note:

The secondary air pump relay (J299) is only activated for approx. 10 seconds. Therefore, it is possible that the final control diagnosis will have to be initiated several times during the test.

Protected by copyright. Copying for private or commercial purposes, in part or in whole, is not permitted unless authorised by Volkswagen AG. Volkswagen AG does not guarantee or accept any liability with respect to the correctness of information in this document. Copyright by Volkswagen AG.
satelettronica

- Press ⇒key.

-> Indicated on display:

```
Final control diagnosis
Secondary air pump relay -J299
```

The secondary air pump relay (on relay plate, relay position 3) is activated for approx. 10 seconds.
The secondary air pump motor (V101) is activated from the secondary air pump relay and runs (approx. 10 seconds) until the final control diagnosis is ended by pressing the ⇒key.

If the secondary air pump motor runs:
- Press ⇒key.

-> Indicated on display:

```
Final control diagnosis
END
```

-> Indicated on display:

```
Function not known or cannot
be carried out at the moment
```

- Press ⇒key.

-> Indicated on display:

```
Rapid data transfer      HELP
Select function XXX
```

Note:
Is displayed as 7th component of the final control diagnosis:
WARNING Fan is switched on
Ignore this display. Continue final control diagnosis by pressing ⇒key, as the radiator fan is only activated on vehicles with map-controlled engine cooling.

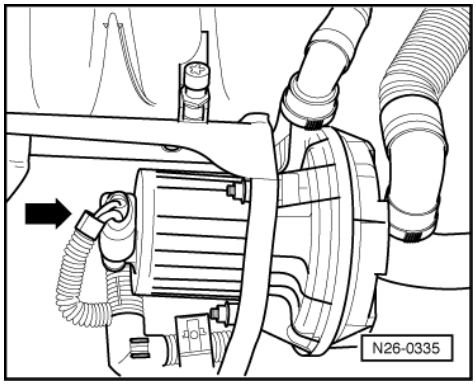

- Press keys 0 and 6 for the "End output" function and confirm input with the Q key.
- Switch off ignition.

If the secondary air pump motor does not run:
- -> Pull off 2-pin secondary air pump motor connector (V101) -arrow-.

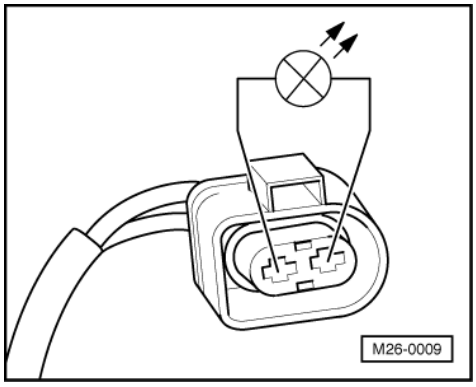

Protected by copyright. Copying for private or commercial purposes, in part or in whole, is not permitted unless authorised by Volkswagen AG. Volkswagen AG does not guarantee or accept any liability with respect to the correctness of information in this document. Copyright by Volkswagen AG.
satelettronica

- -> Connect diode test lamp V.A.G 1527 using adapter cables from V.A.G 1594 to detached connector.
- Initiate final control diagnosis again and activate secondary air pump relay (J299).
  LED must light for approx. 10 seconds.

If LED does not light:

- Proceed with final control diagnosis until completed.
- Switch off ignition.
- Renew secondary air pump motor (V101):

=> Repair group 26; Secondary air system; Removing and installing parts of secondary air system Secondary air system Removing and installing parts of secondary air system

- Interrogate fault memory, if necessary, repair any faults and then erase fault memory => Page 10 , interrogating and erasing fault memory.

If the LED does not flash but the secondary air pump relay clicks:

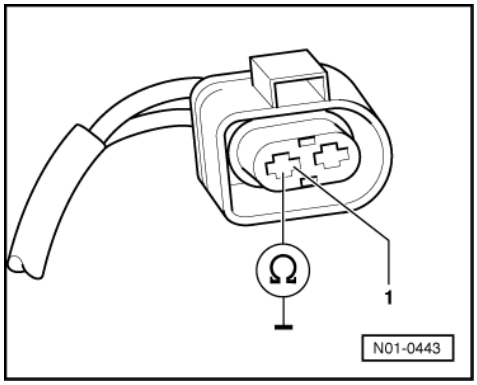

- Proceed with final control diagnosis until completed.
- Switch off ignition.
- Check wire between 2-pin connector contact 1 and body earth for open circuit using current flow diagram.
  Wire resistance: max. 1.5 ω

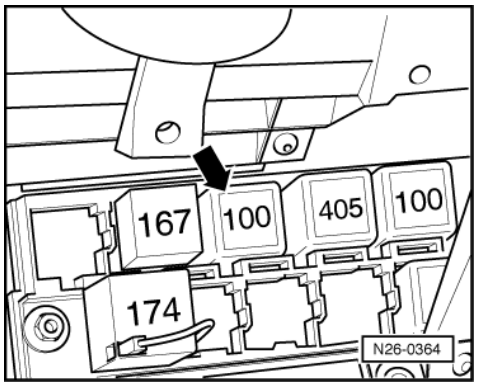

If no wiring fault is detected:

- -> Pull secondary air pump relay (on relay plate, relay position 3) -arrow- off relay carrier.

Notes:

- If tools are necessary to pull relays or control units out of the relay plate, first disconnect battery earth strap.
- Before disconnecting battery earth strap obtain code for radios with anti-theft coding.

Copyrighted by Volkswagen AG. Volkswagen AG does not guarantee or accept any liability with respect to the correctness of information in this document. Copyright by Volkswagen AG. Copying for private or commercial purposes, in part or in whole, is not permitted unless authorised by Volkswagen AG.
satelettronica

Protected by copyright. Copying for private or commercial purposes, in part or in whole, is not permitted unless authorised by Volkswagen AG. Volkswagen AG does not guarantee or accept any liability with respect to the correctness of information in this document. Copyright by Volkswagen AG.

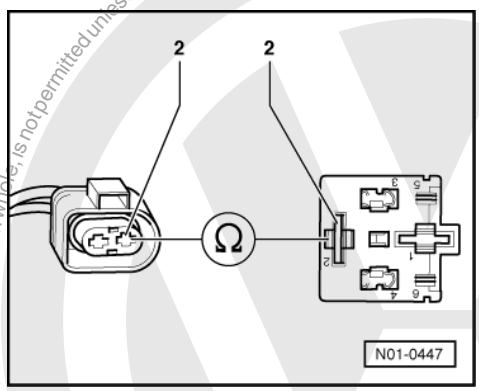

- -> Check wire for open circuit between 2-pin connector contact 2 and contact 2 on relay plate.
  Wire resistance: max. 1.5 ω

If no wiring fault is detected:

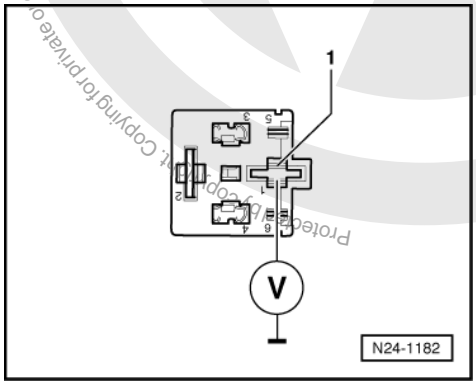

- -> Check the voltage supply on contact 1 (terminal 30) and body earth for secondary air pump relay.
  Specification: at least 11.5 V

If voltage supply is OK:

- Replace the secondary air pump relay (J299).
- Interrogate fault memory, if necessary, repair any faults and then erase fault memory => Page 10 , interrogating and erasing fault memory.

If the LED does not light and the secondary air pump relay does not click:

- Proceed with final control diagnosis until completed.

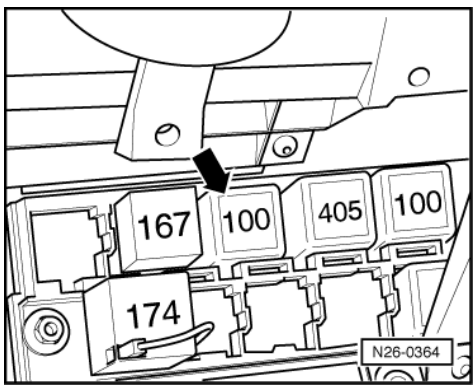

- Switch off ignition.
- -> Pull secondary air pump relay (on relay plate, relay position 3) -arrow- off relay carrier.

Notes:

- If tools are necessary to pull relays or control units out of the relay plate, first disconnect battery earth strap.

satelettronica

- Before disconnecting battery earth strap obtain code for radios with anti-theft coding.

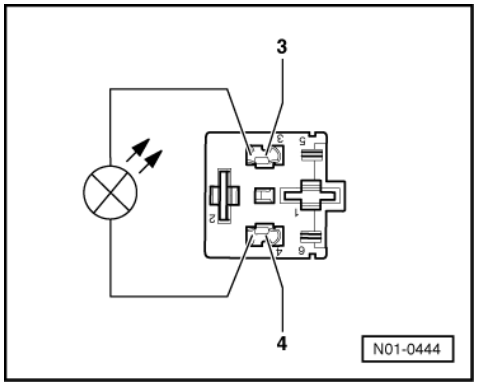

- -> Using adapter cables from V.A.G 1594, connect diode test lamp V.A.G 1527 to contacts 3 and 4 on the relay plate.
- Initiate final control diagnosis again and activate secondary air pump relay (J299).
  LED must light for approx. 10 seconds.

If LED lights:

- Proceed with final control diagnosis until completed.
- Switch off ignition.
- Replace the secondary air pump relay (J299).
- Interrogate fault memory, if necessary, repair any faults and then erase fault memory => Page 10 , interrogating and erasing fault memory.

If LED does not light:

- Proceed with final control diagnosis until completed.
- Switch off ignition.

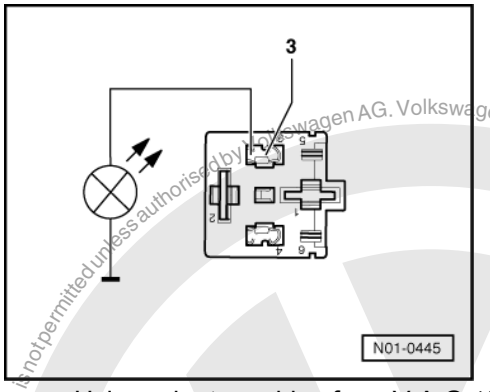

- -> Using adapter cables from V.A.G 1594, connect the diode test lamp V.A.G 1527 to contact 3 of relay plate and body earth.
- Initiate final control diagnosis again and activate secondary air pump relay (J299).
  LED must light for approx. 10 seconds.

If LED does not light:

- Proceed with final control diagnosis until completed.
- Switch off ignition.

Check wire between contact 3 of relay plate and fuel pump relay (J17) for open circuit using current flow diagram.
Wire resistance: max. 1.5 ω

Protected by copyright. Copying for private or commercial purposes, in part or in whole, is not permitted unless authorised by Volkswagen AG. Volkswagen AG does not guarantee or accept any liability with respect to the correctness of information in this document. Copyright by Volkswagen AG.
satelettronica

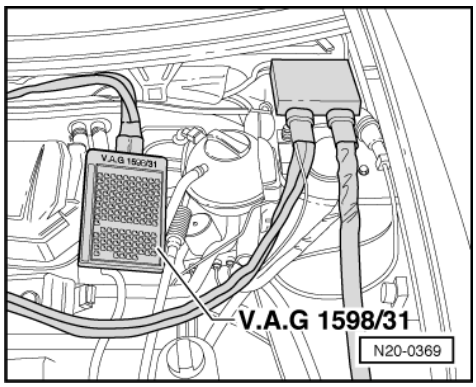

If LED lights:

- Proceed with final control diagnosis until completed.
- Switch off ignition.
- Remove left cover for plenum chamber.
- -> Connect test box V.A.G 1598/31 to control unit wiring harness. The engine control unit remains disconnected.

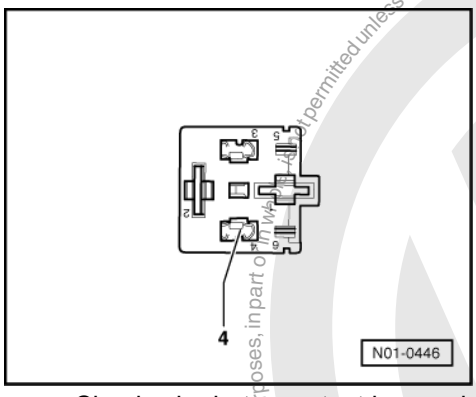

- -> Check wire between test box and relay plate for open circuit using current flow diagram:
  Contact 4 and test box socket 72
  Wire resistance: max. 1.5 ω

If no wiring fault is detected:

- Replace engine control unit
  => Page 145 .

6 - Readiness code

6.1 - Readiness code

Engine code AUR only

Function

The readiness code is an 8-digit number code which displays the status of the emission relevant diagnosis.

When the diagnosis for a system (e.g. secondary air system) has been successfully completed, the corresponding position in the number code will change from 1 to 0.

Protected by copyright. Copyright for printed or electronic copies, in part or in whole, is not permitted unless authorised by Volkswagen AG. Volkswagen AG does not guarantee or accept any liability with respect to the correctness of information in this document. Copyright by Volkswagen AG.
satelettronica

The diagnosis is performed at regular intervals during normal driving. It is recommended that the readiness code be generated after performing repairs on an emission relevant system, to guarantee that these systems function correctly. If a fault is detected during the diagnosis it will be entered in the fault memory.

Each time the fault memory is erased the readiness code will be erased.

6.2 - Reading readiness code

Special tools, workshop equipment, testers, measuring instruments and auxiliary items required

- Fault reader V.A.G 1551 (or vehicle system tester V.A.G 1552) with cable V.A.G 1551/3

Work sequence

- Connect the fault reader V.A.G 1551 (V.A.G 1552). Then switch ignition on and select engine control unit with the "Address word" 01.
  (Connecting fault reader and selecting engine control unit => Page 4 .)

-> Indicated on display:

```
Rapid data transfer      HELP
Select function XXX
```

- Press keys 1 and 5 for the "Readiness code" function and confirm entry with Q key.

Must appear on display when all diagnosis functions have been successfully completed:

-> Indicated on display:

```
Readiness code
00000000 - Test complete
```

- Press ⇒key.
- Press keys 0 and 6 for the "End output" function and confirm input with the Q key.
- Switch off ignition.

-> Indicated on display:

```
Readiness code
00101101 - Test not complete
```

One of the diagnostic checks has not run through successfully:

- Press ⇒key.
- Generate readiness code => Page 41 .

Significance of 8 digit number block for readiness code

Only when all displays = 0, is the readiness code generated								
1	2	3	4	5	6	7	8	Diagnostic function
							0	Catalyst
						0		Catalyst heating (currently no diagnosis/always "0")
					0			Activated charcoal filter system (tank venting system)
				0				Secondary air system
			0					Air conditioner (currently no diagnosis/always "0")
		0						Lambda probes
	0							Lambda probe heating
0								Exhaust gas recirculation

Volkswagen AG does not guarantee or accept any liability with respect to the correctness of information in this document. Copyright by Volkswagen AG. Reproduced by copyright. Copying for private or commercial purposes, partly or in whole, is not permitted unless authorised by Volkswagen AG.
satelettronica

6.3 - Generating readiness code

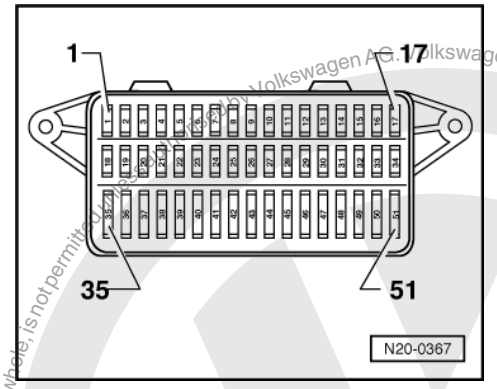

Special tools, workshop equipment, testers, measuring instruments and auxiliary items required

- Fault reader V.A.G 1551 (or vehicle system tester V.A.G 1552) with cable V.A.G 1551/3

Test conditions

- -> All fuses must be OK.
- Vehicle stationary
- The battery voltage must be at least 11.5 V.

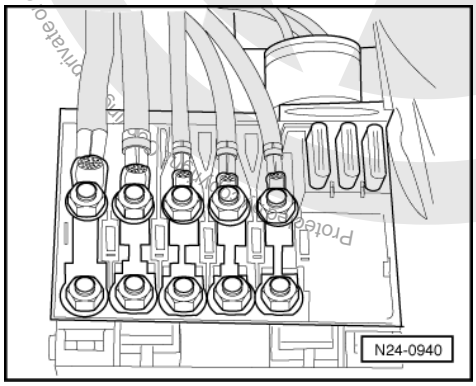

- -> The main fuses must be OK.
- The signals from brake light switch and brake pedal switch must be OK, checking => Page 160 .
- Coolant temperature must be at least 80 °C, =>display group 100, display zone 2.
- Intake air temperature less than 60°C =>display group 04, display zone 4

Work sequence

- Connect fault reader V.A.G 1551 (V.A.G 1552). Start engine and select "Address word" 01 of engine control unit. When doing this the engine must be running at idling speed. (Connecting fault reader and selecting engine control unit => Page 4 .)

Work step 1: Interrogate fault memory

-> Indicated on display:

```
Rapid data transfer      HELP
Select function XXX
```

- Press keys 0 and 2 for function "Interrogate fault memory" and confirm entry with Q key.

-> The number of faults stored or "No fault recognised!" will be shown on the display.

Copyright by Volkswagen AG. Volkswagen AG does not guarantee or accept any liability with respect to the correctness of information in this document. Copyright by Volkswagen AG. Protected by copyright. Copying for private or commercial purposes, in part or in whole, is not permitted unless authorised by Volkswagen AG.
satelettronica

```
X Faults recognised!
```

If a fault is stored:

- Rectify faults printed out using fault table:
  SAE P0 or P2 codes=> Page 16

If no fault is stored:

- Press ⇒key.

Work step 2: Erase fault memory

-> Indicated on display:

```
Rapid data transfer      HELP
Select function XXX
```

- Press keys 0 and 5 for the function "Erase fault memory" and confirm entry with Q key.

Note:

The readiness code is reset or erased each time fault memory is erased.

-> Indicated on display:

```
Rapid data transfer
Fault memory is erased!
```

Note:

If the ignition is switched off between "Interrogate fault memory" and "Erase fault memory" the fault memory will not be erased.

- Press ⇒key.

Work step 3: Matching the throttle valve control part to the engine control unit

-> Indicated on display:

```
Rapid data transfer      HELP
Select function XXX
```

- Press keys 0 and 8 for the function "Read measured value block" and confirm entry with Q key.

-> Indicated on display:

```
Read measured value block
Input display group number XXX
```

- Press keys 0, 6 and 0 for the "Display group number 60" and confirm entry with Q key.
- Check adaption state of throttle valve control part in display zone 4
  Specification: ADP. OK.

-> Indicated on display:
(1...4 = display zones)

```
Read measured value block      60
     xx.x %     xx.x %     x     ADP. OK
```

If the display does not indicate as described:

- Erase the learnt values and adapt the engine control unit again=> Page 147 .

If the display indicates as described:

- Press C key.

Protected by copyright. Copying for private or commercial purposes, in part or in whole, is not permitted unless authorised by Volkswagen AG. Volkswagen AG does not guarantee or accept any liability with respect to the correctness of information in this document. Copyright by Volkswagen AG.
satelettronica

Work step 4: Basic setting for exhaust gas recirculation valve (N18)

-> Indicated on display:

```
Read measured value block
Input display group number XXX
```

- Press keys 0, 7 and 4 for "display group number 74" and confirm entry with Q key.
- Check adaption state of exhaust gas recirculation valve in display zone 4
  Specification: ADP. OK.

-> Indicated on display:
(1...4 = display zones)

```
Read measured value block     74
     xx.x V     xx.x V     xx.x %     ADP.
OK
```

If the display does not indicate as described:

- Erase the learnt values and adapt the engine control unit again=> Page 147 .

If the display indicates as described:

- Press C key.

Work step 5: Check of minimum running period since start of engine and coolant temperature

-> Indicated on display:

```
Read measured value block
Input display group number XXX
```

- Press keys 1, 0 and 0 for the "Display group number 100" and confirm entry with Q key.

Note:

During further work sequence the engine must not be switched off again. To maintain a more constant engine speed switch on lights or rear window heating if necessary.

-> Indicated on display:
(1...4 = Display zones)

```
Read measured value block 100
     1     2     3     4
```

- Check coolant temperature (display zone 2)
  Specification: min. 80 °C
  and the minimum running period since start of engine (display zone 3)
  Specification: min. 120 seconds

If the specifications are obtained:

- Press ⇒key.

Work step 6: Lambda probe readiness

-> Indicated on display:

```
Rapid data transfer     HELP
Select function XXX
```

- Press keys 0 and 4 for the function "Initiating basic settings" and confirm entry with Q key.

-> Indicated on display:

```
Basic setting
Input display group number XXX
```

Protected by copyright. Copying for private or commercial purposes, in part or in whole, is not permitted unless authorised by Volkswagen AG. Volkswagen AG does not guarantee or accept any liability with respect to the correctness of information in this document. Copyright by Volkswagen AG.
satelettronica

- Press keys 0, 3 and 0 for the "Display group number 30" and confirm entry with Q key.

-> Indicated on display:
(1...2 = Display zones)

```
System in basic setting 30
     1      2
```

- Check Lambda control status before catalyst (display zone 1):
  Specification: 1 1 1
  (Significance => Page 59)
- Increase engine speed to 2500...4000 rpm until the Lambda probe after catalyst is ready for use (display zone 2):
  Specification: 1 1 x
  (Significance => Page 59)

Notes:

- The first position of the 3 digit number block fluctuates between 0 and 1 (Lambda probe heating on and off).
- The rightmost position of the 3 digit number block (display zone 2) will be set to 1 only at part load and increased exhaust temperature.

If the specifications are not obtained:

- Interrogate fault memory => Page 10 .

If the specifications are obtained:

- Press C key.

-> Indicated on display:

```
Basic setting
Input display group number XXX
```

- Press keys 2, 2 and 7 for the "Display group number 227" and confirm entry with Q key.

-> Indicated on display:
(1...4 = Display zones)

```
System in basic setting 227
     1      2      3    4
```

- Increase and maintain engine speed between 2500...4000 rpm.
- Observe the third display zone. The counter must count up to 100 four times.
- Then run engine at idling speed.
- Press C key.

Work step 7: Lambda probe ageing before catalyst diagnosis

-> Indicated on display:

```
Basic setting
Input display group number XXX
```

- Press keys 0, 3 and 4 for "Display group number 34" and confirm entry with Q key.

-> Indicated on display:
(1...4 = Display zones)

```
System in basic setting     34
     1      2      3     4
```

- Raise engine speed to 2500...4000 rpm until display in display zone 4 jumps from "Test OFF" to "Test ON".

Protected by copyright. Copying for private or commercial purposes, in any form whatsoever, is not permitted unless authorised by Volkswagen AG. Volkswagen AG does not guarantee or accept any liability with respect to the correctness of information in this document. Copyright by Volkswagen AG.

satelettronica

Note:

This process can take a few minutes. Depending upon the control unit version, the test starts between 100...400 °C catalyst temperature (display zone 2).

- Maintain the increased engine speed until the display in display zone 4 shows the result of the brief test: Specification "B1-P1 OK"

If the display does not indicate as described:

- Interrogate fault memory, if necessary, repair any faults and then erase fault memory => Page 10 , interrogating and erasing fault memory.

If the display indicates as described:

- Press C key.

Work step 8: Activated charcoal filter system diagnosis (tank breathing system)

- Press keys 0, 7 and 0 for "Display group number 70" and confirm entry with Q key.

-> Indicated on display:
(1...4 = Display zones)

```
System in basic setting      70
     1      2      3      4
```

When the diagnosis is initiated by the engine control unit the display in display zone 4 jumps from "Test OFF" to "Test ON"

- Run engine at idling speed until the display in display zone 4 shows the result of the short test. Specification "TBV OK"

If the display does not indicate as described:

- Interrogate fault memory, if necessary, repair any faults and then erase fault memory => Page 10 , interrogating and erasing fault memory.

If the display indicates as described:

- Press C key.

Work step 9: Exhaust gas recirculation system diagnosis

-> Indicated on display:

```
Basic setting
Input display group number XXX
```

- Press keys 0, 7 and 5 for the "Display group number 75" and confirm entry with Q key.

-> Indicated on display:
(1...4 = Display zones)

```
System in basic setting      75
     1      2      3      4
```

If the diagnosis is initiated from engine control unit the display in display zone 4 jumps from "Test OFF" to "Test ON"

- Run engine at idling speed until the display in display zone 4 shows the result of the short test. Specification "Syst. OK."

If the display does not indicate as described:

Copyright by Volkswagen AG. Volkswagen AG does not guarantee or accept any liability with respect to the correctness of information in this document. Copyright by Volkswagen AG. Reproduced by permission only for commercial purposes, in part or whole, not permanently stored unless authorized by Volkswagen AG.

satelettronica

- Interrogate fault memory, if necessary, repair any faults and then erase fault memory => Page 10 , interrogating and erasing fault memory.

If the display indicates as described:

- Press C key.

Work step 10: Secondary air system diagnosis

-> Indicated on display:

```
Basic setting
Input display group number XXX
```

- Press keys 0, 7 and 7 for the "Display group number 77" and confirm entry with Q key.

-> Indicated on display:
(1...4 = Display zones)

```
System in basic setting     77
     1     2     3     4
```

- Depress brake pedal and hold it down.

  The engine speed is increased by the control unit to approx. 1400 rpm.

If the diagnosis is initiated from engine control unit the display in display zone 4 jumps from "Test OFF" to "Test ON"

- Maintain the increased engine speed until the display in display zone 4 shows the result of the short test. Specification: "Syst. OK."

If the display does not indicate as described:

- Interrogate fault memory, if necessary, repair any faults and then erase fault memory => Page 10 , interrogating and erasing fault memory.

If the display indicates as described:

- Press C key.

Work step 11: Diagnosis of Lambda probe after catalyst

-> Indicated on display:

```
Basic setting
Input display group number XXX
```

- Press keys 0, 4 and 3 for "Display group number 43" and confirm entry with Q key.

-> Indicated on display:
(1...4 = Display zones)

```
System in basic setting     43
     1     2     3     4
```

- Depress brake pedal and hold it down.

  The engine speed is increased by the control unit to about 1400 rpm.

When the diagnosis is initiated by the engine control unit the display in display zone 4 jumps from "Test OFF" to "Test ON"

Protected by copyright. Copyright by Volkswagen AG. Volkswagen AG does not guarantee or accept any liability with respect to the correctness of information in this document. Copyright by Volkswagen AG. Reproduction or circulation for commercial purposes is not permitted unless authorised by Volkswagen AG.
satelettronica

Note:

This process can take a few minutes.

- Maintain the increased engine speed until the display in display zone 4 shows the result of the short test Specification "B1-P2 OK."

If the display does not indicate as described:

- Interrogate fault memory, if necessary, repair any faults and then erase fault memory => Page 10 , interrogating and erasing fault memory.

If the display indicates as described:

- Press C key.

Work step 12: Catalyst diagnosis

-> Indicated on display:

```
Basic setting
Input display group number XXX
```

- Press keys 0, 4 and 6 for "Display group number 46" and confirm entry with Q key.

-> Indicated on display:
(1...4 = Display zones)

```
System in basic setting     46
     1     2     3     4
```

- Raise engine speed to 2500...4500 rpm until display in display zone 4 jumps from "Test OFF" to "Test ON". Catalyst temperature in display zone 2 must be at least 400 °C.
- Continue to maintain engine speed at 2500...4500 rpm until Specification "Cat B1 OK" appears in display zone 4.

If the display does not indicate as described:

- Interrogate fault memory, if necessary, repair any faults and then erase fault memory => Page 10 , interrogating and erasing fault memory.

If the display indicates as described:

- Press ⇒key.
- Read readiness code=> Page 40

Protected by copyright. Copyright by Volkswagen AG. Volkswagen AG does not guarantee or accept any liability with respect to the correctness of information in this document. Copyright by Volkswagen AG. Copying for private and commercial purposes, in part or in whole, is not permitted unless authorised by Volkswagen AG.
satelettronica

7 - Measured value blocks

7.1 - Measured value blocks

7.2 - Safety precautions

Observe following if test and measuring instruments are required during a test drive:

- Test and measuring instruments must be secured to rear seat and operated by a 2nd person from this location.

  If test and measuring instruments are operated from front passenger's seat and the vehicle is involved in an accident, there is a possibility that the person sitting in this seat may receive serious injuries when the airbag is triggered.

7.3 - Read measured value block

The measured values in the functions read measured value block and basic setting are described during the individual component test. This table serves only as an overview.

Special tools, workshop equipment, testers, measuring instruments and auxiliary items required

- Fault reader V.A.G 1551 (or vehicle system tester V.A.G 1552) with cable V.A.G 1551/3

Test conditions

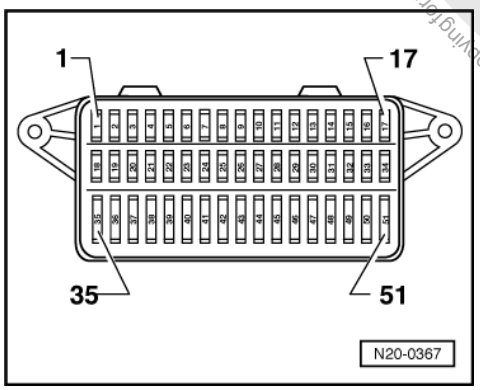

- -> The fuses 1, 3, 24, 27, 31, 34, 36 and 40 must be OK.
- Earth connection in plenum chamber OK.
- All electrical consumers, e.g. lights and rear window heating must be switched off.
- If the vehicle is equipped with an air conditioning system, this must be switched off.
- No faults must be stored in fault memory => Page 10 , interrogating and erasing fault memory.
- Coolant temperature must be at least 80 °C, =>Display group 01, display zone 2.

Work sequence

- Connect fault reader V.A.G 1551 (V.A.G 1552). Start engine and select "Address word" 01 of engine control unit. When doing this the engine must be running at idling speed.
  (Connecting fault reader and selecting engine control unit => Page 4 .)

-> Indicated on display:

```
Rapid data transfer      HELP
Select function XXX
```

Protected by copyright. Copying for private or commercial purposes, in part or in whole, is not permitted unless authorised by Volkswagen AG. Volkswagen AG does not guarantee or accept any liability with respect to the correctness of information in this document. Copyright by Volkswagen AG.
satelettronica

- Press keys 0 and 8 for the function "Read measured value block" and confirm entry with Q key.

-> Indicated on display:

```
Read measured value block
Input display group number XXX
```

- Select required display group number.

Note:

The display group number 1 is an example, to illustrate the sequence.

- Press keys 0, 0 and 1 for "Display group number 1" and confirm entry with Q key.

-> Indicated on display:
(1...4 = Display zones)

```
Read measured value block 1
     1     2     3     4
```

- Check whether the coolant temperature is above 80 °C in display zone 2.

Note:

To change to another display group proceed as follows:

Display group	V.A.G 1551	V.A.G 1552
Higher	Press key 3	Press ↑key
Lower	Press key 1	Press ↓key
Skip	Press key C	Press key C

- If the specifications in all display zones are obtained, press ⇒key.

-> Indicated on display:

```
Rapid data transfer      HELP
Select function XXX
```

- Press keys 0 and 6 for the "End output" function and confirm input with the Q key.
- Switch off ignition.

Note:

Measured value blocks which are not described in this chapter are currently only intended for the research and development and production. The values displayed are not relevant for service department fault finding.

8 - Evaluating measured value blocks, display groups 0...9 -Basic functions-

8.1 - Evaluating measured value blocks, display groups 0...9 -Basic functions-

Display group 1 -Basic functions-						
▪ Engine running at idling speed						
Read measured value block 1 ⇒				◂ Indicated on display		
xxxx rpm	xxx.x °C	xx.x %	xxxxxxxx			
1	2	3	4	◂ Display zones	Specification	Evaluation
				Adjustment conditions for basic setting	1x111111	=> Page 50
			Lambda regulator before catalyst		-10.0...10.0 %	=> Page 61

Protected by copyright. Copying for private or commercial purposes, in part or in whole, is not permitted unless authorised by Volkswagen AG. Volkswagen AG does not guarantee or accept any liability with respect to the correctness of information in this document. Copyright by Volkswagen AG.
satelettronica

	Coolant temperature	80.0...110.0 °C	=> Page 52
	Engine speed (idling speed)	760...880 rpm	=> Page 50

1) Up-to-date specifications:

=> Exhaust emissions test binder

Note on display zone 3:

The display must fluctuate at 0.0 %. If 0.0 % is displayed constantly, the Lambda regulation has switched from regulation to control because there is a fault in the Lambda regulation. Interrogate fault memory => Page 10 , Interrogating and erasing fault memory.

Evaluating display group 1, display zone 1 - Engine speed (idling speed)

Appears on display	Possible fault cause	Fault elimination
Less than specification	- Throttle valve control unit (J338) sticking or defective	- Check throttle valve control unit => Page 108 - Perform idling check => Page 129
More than specification	- Idling speed not recognised	- Interrogate fault memory, => Page 10 , Interrogating and erasing fault memory
	- Large amount of unmetered air (cannot be compensated for by the idling stabilisation)	- Check intake air system for leaks => Page 128
	- Throttle valve control unit (J338) sticking/defective	- Check throttle valve control unit => Page 108 - Perform idling check => Page 129

Significance of figures in 8-digit number block, display zone 4 - Setting conditions for basic setting

Significance when display = 1								
1	2	3	4	5	6	7	8	Setting conditions for basic setting
1								No faults recognised by self-diagnosis
	x							Not relevant
		1						Air conditioner compressor switched off
			1					Idling recognised
				1				Lambda regulation OK.
					1			Throttle valve closed
						1		Speed below 2000 rpm
							1	Coolant temperature above 80 °C

Display group 2 -Basic functions-						
▪ Engine running at idling speed						
Read measured value block 2			⇒	◂ Indicated on display		
xxxx rpm	xxx.x %	x.x ms	x.x g/s			
1	2	3	4	◂ Display zones	Specification	Evaluation
				Air mass drawn in	2.0...4.5 g/s	=> Page 51
				Injection period	2.0...4.0 ms	=> Page 51
				Engine load	24.0...34.0 %	=> Page 54

Copyright by Volkswagen AG. Volkswagen AG does not guarantee or accept any liability with respect to the correctness of information in this document. Copying for private or commercial purposes, in part or in whole, is not permitted unless authorised by Volkswagen AG.
satelettronica

Engine speed (idling speed)	760...880 rpm	=> Page 50

1) Up-to-date specifications:

=> Exhaust emissions test binder

Evaluating display group 2, display zone 3 - Injection period

Appears on display	Possible fault cause	Fault elimination
Less than specification	- Large amount of fuel from activated charcoal filter system	- Check activated charcoal filter solenoid valve 1 => Page 25 , Final control diagnosis
More than specification	- Increased engine load due to electrical consumers, air conditioning or power assisted steering on full lock	- Eliminate increased load (air conditioning, power assisted steering etc.)

Evaluating display group 2, display zone 4 - Air mass drawn in

Appears on display	Possible fault cause	Fault elimination
Less than specification	- Large amount of unmetered air between intake manifold and air mass meter	- Check air intake system for leaks => Page 128
More than specification	- Increased engine load due to electrical consumers, air conditioning or power assisted steering on full lock	- Eliminate increased load (air conditioning, power assisted steering etc.)

Display group 3 -Basic functions-

▪ Engine running at idling speed

Read measured value block 3 ⇒ ◂ Indicated on display

xxxx rpm	x.x g/s	xxx.x %	xx.x°BTDC	◂ Display zones	Specification	Evaluation
1	2	3	4	Ignition timing	0.0...12° BTDC	---
				Throttle valve angle Angle sender 1 for throttle valve drive (G187)	0.0...4.0 %	=> Page 55
				Air mass drawn in	2.0...4.5 g/s	=> Page 51
				Engine speed (idling speed)	760...880 rpm	=> Page 50

1) Up-to-date specifications:

=> Exhaust emissions test binder

Note on display zone 3:

Display value must be approx. 100.0 % when accelerator pedal is fully depressed.

Display group 4 -Basic functions-

▪ Engine running at idling speed

Read measured value block 4 ⇒ ◂ Indicated on display

xxxx rpm	xx.x V	xxx.x °C	xxx.x °C	◂ Display zones	Specification	Evaluation
1	2	3	4	Intake air temperature	-38.0...80.0 °C	=> Page 53
				Coolant temperature	80.0...110.0 °C	=> Page 52

satelettronica

	Supply voltage for engine control unit	11.5...15.0 V	=> Page 52
	Engine speed (idling speed)	760...880 rpm	=> Page 50

1) Up-to-date specifications:

=> Exhaust emissions test binder

Note on display zone 3:

The engine control unit will use the intake air temperature as a replacement value for an engine start (start temperature - replacement value) as soon as there is a fault stored in the fault memory, which affects the coolant temperature sender (G62). The temperature then rises according to a model stored in the control unit. When the engine has reached normal working temperature a fixed replacement value will be displayed after a certain period. This fixed value is also dependent upon the intake air temperature (below or above 20 °C).

Note on display zone 4:

The total temperature range is given as the specification. The displayed value must be above ambient temperature.

Evaluating display group 4, display zone 2 - Control unit voltage supply

Appears on display	Possible fault cause	Fault elimination
Less than specification	- Alternator defective, battery heavily discharged	- Check alternator and battery voltage, charge battery: => Electrical system; Repair group 27
	- Battery heavily loaded shortly after starting due to high charging current and current consumers	- Increase revs slightly for a few minutes and switch off current consumers
	- Transfer resistance in the current supply or the engine control unit earth connection	- Check engine control unit voltage supply => Page 143
	- Current draw when ignition is off	- Eliminate current draw
More than specification	- Voltage regulator on alternator defective	- Check voltage regulator, renew if necessary: => Electrical system; Repair group 27
	- Excess voltage due to jump starting or quick charging unit	- Interrogate fault memory => Page 10 , Interrogating and erasing fault memory

Evaluating display group 4, display zone 3 - Coolant temperature

Appears on display	Possible fault cause	Fault elimination
Less than specification	- Engine too cold	- If necessary carry out test drive
	- Coolant temperature sender or wiring to engine control unit	- Check coolant temperature sender =>Page 113
More than specification	- Radiator soiled	- Clean radiator
	- Radiator fan not functioning	- Check function => Current flow diagrams, Electrical fault finding and Fitting locations
	- Thermostat sticking/defective	- Check thermostat: => Repair group 19; Removing and installing parts of cooling system; Parts of cooling system, engine side Parts of cooling system, engine side
	- Coolant temperature sender or wiring to engine control unit	- Check coolant temperature sender =>Page 113

Copyright. Copyright by Volkswagen AG, Volkswagen AG does not guarantee or accept any liability with respect to the correctness of information in this document. Copyright by Volkswagen AG. Volkswagen AG does not permit unless authorised by Volkswagen AG, Volkswagen AG. Copyright. Copyright by Volkswagen AG. Volkswagen AG does not permit unless authorised by Volkswagen AG, Volkswagen AG. Copyright. Copyright by Volkswagen AG. Volkswagen AG does not permit unless authorised by Volkswagen AG, Volkswagen AG. Copyright. Copyright by Volkswagen AG. Volkswagen AG does not permit unless authorised by Volkswagen AG, Volkswagen AG. Copyright.

satelettronica

Constant 49.5 or 90°C	- Coolant temperature sender (G62) defective	- Check coolant temperature sender =>Page 113

Evaluating display group 4, display zone 4 - Intake air temperature

Appears on display	Possible fault cause	Fault elimination
Less or more than specification	- Air intake temperature sender (G42) defective	- Check air intake temperature sender =>Page 104
Constant 9.0 or 30.0 °C		

Display group 5 -Basic functions-

▪ Engine running at idling speed

Read measured value block 5 ⇒ ◂ Indicated on display

xxxx rpm xxx.x % xxx km/h Text

1	2	3	4	◂ Display zones	Specification	Evaluation
				Operating mode: Idle, part throttle, enrichment, overrun, full throttle	Idle	---
				Road speed (actual)	0 km/h	---
				Engine load	24.0...34.0 %	=> Page 54
				Engine speed (idling speed)	760...880 rpm	=> Page 50

1) Up-to-date specifications:

=> Exhaust emissions test binder

Note on display zone 3:

Checking road speed signal => Page 150

Display group 6 -Basic function-

▪ Engine running at idling speed

Read measured value block 6 ⇒ ◂ Indicated on display

xxxx rpm xxx.x % xxx.x °C xx.x %

1	2	3	4	◂ Display zones	Specification	Evaluation
				Altitude correction factor	-50.0...10.0 %	=>Page 54
				Intake air temperature	-38.0...80.0 °C	=> Page 53
				Engine load	24.0...34.0 %	=> Page 54
				Engine speed (idling speed)	760...880 rpm	=> Page 50

1) Up-to-date specifications:

=> Exhaust emissions test binder

Protected by copyright. Copying for private or commercial purposes, in part or whole, is not permitted unless authorised by Volkswagen AG. Volkswagen AG does not guarantee or accept any liability with respect to the correctness of information in this document.
satelettronica

Note on display zone 3:

The total temperature range is given as the specification. The displayed value must be above ambient temperature.

Specfications for display group 6, display zone 4 - Altitude correction factor

Sea level	Specification
approx. 0 m	+5.0...-10.0 %
approx. 1000 m	-5.0...-20.0 %
approx. 2000 m	-10.0...-30.0 %

Volkswagen AG. Volkswagen AG does not guarantee or accept any liability with respect to the correctness of information in this document. Copyright by Volkswagen AG. Reproduction, in part or whole, is not permitted unless authorised by Volkswagen AG. Copyright by copyright. Commercial purposes, in part or whole, is not permitted unless authorised by Volkswagen AG.

9 - Evaluating measured value blocks, display groups 10...29 -Ignition-

9.1 - Evaluating measured value blocks, display groups 10...29 -Ignition-

Display group 10 -Ignition-						
▪ Engine running at idling speed						
Read measured value block 10 ⇒				◂ Indicated on display		
xxxx rpm	xxx.x %	xxx.x %	xx.x°BTDC			
1	2	3	4	◂ Display zones	Specification	Evaluation
				Ignition timing	0.0...12° BTDC	---
			Throttle valve angle Angle sender 1 for throttle valve drive (G187)		0.0...4.0 %	=> Page 55
		Engine load			24.0...34.0 %	=> Page 54
	Engine speed (idling speed)				760...880 rpm	=> Page 50

1) Up-to-date specifications:

=> Exhaust emissions test binder

Note on display zone 3:

Display values must be approx. 100.0 % when accelerator pedal is fully depressed.

Evaluating display group 10, display zone 2 - Engine load

Appears on display	Possible fault cause	Fault elimination
Less than specification	- Lesser values can occur when driving in overrun	
	- Large amount of unmetered air (cannot be compensated for by the idling stabilisation)	- Check intake air system for leaks => Page 128
		- Perform idling check => Page 129
More than specification	- Poor idling speed (does not run on all cylinders)	- Check injectors => Page 118
		- Check spark plugs and ignition leads => Page 171

satelettronica

	- Increased engine load due to electrical consumers, air conditioning, gear selected or P.A.S. on full lock	- Eliminate increased load (air conditioning, power assisted steering etc.)
	- Throttle valve control part (J338) sticking/ defective	- Check throttle valve control part => Page 108
	- Air mass meter (G70) defective	- Check air mass meter => Page 102
	- Large amount of unmetered air (cannot be compensated for by the idling stabilisation)	- Check intake air system for leaks => Page 128
		- Perform idling check => Page 129

Evaluating display group 10, display zone 3 - Throttle valve angle, throttle valve drive angle sender 1

Appears on display	Possible fault cause	Fault elimination
More than specification	- Engine control unit not matched to throttle valve control part	- Erase learnt values and match engine control unit anew => Page 147
	- Throttle valve drive angle sender 1 (G187) in throttle valve control part defective	- Check throttle valve control part => Page 108
	- Throttle valve sticking	- Eliminate cause

Display group 12 -Ignition- Position of camshaft in respect to crankshaft						
▪ Engine running at idling speed						
Read measured value block 12 ⇒				◂ Indicated on display		
xxxx rpm	xxx.x %	xx	xx			
1	2	3	4	◂ Display zones	Specification	Evaluation
				Number of crankshaft sprocket tooth on camshaft signal edge change from high >low	86...90	---
				Number of crankshaft sprocket tooth on camshaft signal edge change from low >high	26...30	---
				Engine load	24.0...34.0 %	=> Page 54
				Engine speed (idling speed)	760...880 rpm	=> Page 50

1) Up-to-date specifications:

=> Exhaust emissions test binder

Notes on display zones 3 and 4:

- The engine speed sender (G28) on the crankshaft transmits both an engine speed signal and a reference mark signal. The reference mark signal is generated by a gap in the sender wheel.
- The Hall sender (G40) rotor ring on the camshaft has a 180°division so that for one half of each camshaft revolution it covers the window on the Hall sender and for the other half-revolution the window is exposed.
- To synchronise the components when starting, the engine control unit records the instant when the rotor ring begins to cover the window (signal change from - to +) and the instant when it begins to expose the window (signal change from + to -).
- When the reference mark signal on the crankshaft is detected, the engine control unit counts the number of teeth on the crankshaft-mounted sender wheel. As soon as it has counted between 26 and 30 teeth after the gap, the signal sent by the Hall sender on the camshaft should change from - to + (rotor ring begins to cover window). After between 86 and 90 teeth, with the crankshaft already making its second revolution, the Hall sender signal should change from + to - (rotor ring begins to expose window).
- If the signal does not change within the tooth ranges specified above, this may mean that the toothed belt has slipped.

Display group 14 -Ignition- Misfire recognition

Protected by copyright. Copying for private or commercial purposes, in part or in whole, is not permitted unless authorised by Volkswagen AG. Volkswagen AG does not guarantee or accept any liability with respect to correctness of information in this document. Copyright by Volkswagen AG.

satelettronica

▪ Whilst driving						
Read measured value block 14			⇒	◂ Indicated on display		
xxxx rpm	xxx.x %	xxx	Text			
1	2	3	4	◂ Display zones	Specification	Evaluation
				Misfire recognition (inactive, activated)	activated	---
			Misfire total		0...20	=> Page 56
		Engine load			24.0...100.0 %	---
	Engine speed				760...6350 rpm	---

Note on display zone 3:

The total number of misfires is displayed from the time the engine was started. The specification is only valid for max. 5 minutes after the engine has been started.

Evaluating display group 14, display zone 3 - Total number of misfires

Appears on display	Possible fault cause	Fault elimination
More than specification	- Spark plug defective - Spark plug connector defective - Ignition transformer (N152) defective - Ignition transformer final output stage (N122) defective	- Check spark plugs and ignition/HT wiring with connector => Page 177
	- Injector defective	- Check injectors => Page 118
	- Large amount of unmetered air (cannot be compensated for by the idling stabilisation)	- Check intake air system for leaks => Page 128
	- Exhaust gas recirculation valve (N18) sticking/defective	- Check exhaust gas recirculation valve => Page 25 , Final control diagnosis
	- Timing adjusted incorrectly	- Check timing: => Repair group 15; Removing and installing cylinder head, Removing and installing toothed belt, Tensioning

Display group 15 -Ignition- Misfire recognition Cyl. 1 to Cyl. 3						
▪ Whilst driving						
Read measured value block 15			⇒	◂ Indicated on display		
xxx	xxx	xxx	Text			
1	2	3	4	◂ Display zones	Specification	Evaluation
				Misfire recognition (inactive, activated)	activated	---
			Misfire cyl. 3		0...5	=> Page 57
		Misfire cyl. 2			0...5	=> Page 57
	Misfire cyl. 1				0...5	=> Page 57

Notes on display zones 1 and 2:

The specification is only valid for max. 5 minutes after the engine has been started.

Display group 16 -Ignition- misfire recognition Cyl. 4		
▪ Whilst driving		
Read measured value block 16	⇒	◂ Indicated on display

Protected by copyright. Copying or in whole, is not permitted unless authorised by Volkswagen AG. Volkswagen AG does not guarantee or accept any liability with respect to the correctness of information in this document.
Protected by copyright. Copying or in whole, is not permitted unless authorised by Volkswagen AG. Volkswagen AG does not guarantee or accept any liability with respect to the correctness of information in this document.
satelettronica

xxx	---	---	Text			
1	2	3	4	◂ Display zones	Specification	Evaluation
				Misfire recognition (inactive, activated)	activated	---
	Misfire cyl. 4				0...5	=> Page 57

Notes on display zone 1:

The specification is only valid for max. 5 minutes after the engine has been started.

Evaluating display group 15 display zones 1 to 3 or display group 16 display zone 1

- Misfire cyl. 1 to cyl. 4

Appears on display	Possible fault cause	Fault elimination
More than specification	- Spark plug defective - Spark plug connector defective - Ignition transformer (N152) defective - Ignition transformer final output stage (N122) defective	- Check spark plugs and ignition/HT wiring with connector => Page 177
	- Injector defective	- Check injectors => Page 118
	- Large amount of unmetered air (cannot be compensated for by the idling stabilisation)	- Check intake air system for leaks => Page 128
	- Exhaust gas recirculation valve (N18) sticking/defective	- Check exhaust gas recirculation valve => Page 25 , Final control diagnosis
	- Timing adjusted incorrectly	- Check timing: => Repair group 15; Removing and installing cylinder head, Removing and installing toothed belt, Tensioning

Protected by copyright. Copying for private or commercial purposes, in part or in whole, is not permitted unless authorised by Volkswagen AG. Volkswagen AG does not guarantee or accept any liability with respect to the correctness of information in this document. Copyright by Volkswagen AG.

Display group 20 -Ignition- Knock control Cyl. 1 to Cyl. 4						
▪ Whilst driving Read measured value block 20 xx.x °B(A)TDC xx.x °B(A)TDC xx.x °B(A)TDC xx.x °B(A)TDC				⇒ ◂ Indicated on display		
1	2	3	4	◂ Display zones	Specification	Evaluation
				Cyl. no. 4: retardation by knock regulation	0.0...12.0 °KW	=> Page 58
				Cyl. no. 3: retardation by knock regulation	0.0...12.0 °KW	=> Page 58
		Cyl. no. 2: retardation by knock regulation			0.0...12.0 °KW	=> Page 58
	Cyl. no. 1: retardation by knock regulation				0.0...12.0 °KW	=> Page 58

Note on display zones 1 to 4:

Display value should be 0.0 BTDC at idling speed.

satelettronica

Evaluating display group 20, display zones 1 to 4 - Cyl. 1 to Cyl. 4 ignition retardation

Appears on display	Possible fault cause	Fault elimination
All cylinders greater than 12.0 °CA	- Knock sensor (G61) defective - Connector corroded	- Check knock sensor => Page 181
	- Knock sensor (G61) incorrectly tightened	- Loosen knock sensor and tighten to 20 Nm
	- Ancillary components on engine loose	- Tighten ancillary components
	- Poor fuel quality	- Change type of fuel
One cylinder deviates greatly from the others	- Connector corroded	- Check knock sensor => Page 181
	- Engine damaged	- Check compression pressures: => Repair group 15; Removing and installing cylinder head; Checking compression pressure Checking compression pressure
	- Ancillary components on engine loose	- Tighten ancillary components

Display group 22 -Ignition- Knock control cylinders 1 and 2						
▪ Whilst driving						
Read measured value block 22			⇒	◂ Indicated on display		
xxxx rpm	xxx.x %	xx.x °B(A)TDC	xx.x °B(A)TDC			
1	2	3	4	◂ Display zones	Specification	Evaluation
				Cyl. no. 2: retardation by knock regulation	0.0...12.0 °KW	=> Page 59
			Cyl. no. 1: retardation by knock retardation		0.0...12.0 °KW	=> Page 59
		Engine load			24.0...100.0 %	---
	Engine speed				760...6350 rpm	---

Note on display zones 3 and 4:

Display value should be 0.0 BTDC at idling speed.

Display group 16 -Ignition- Knock control cylinders 3 and 4						
▪ Whilst driving						
Read measured value block 23			⇒	◂ Indicated on display		
xxxx rpm	xxx.x %	xx.x °B(A)TDC	xx.x °B(A)TDC			
1	2	3	4	◂ Display zones	Specification	Evaluation
				Cyl. no. 4: retardation by knock regulation	0.0...12.0 °KW	=> Page 59
			Cyl. no. 3: retardation by knock regulation		0.0...12.0 °KW	=> Page 59
		Engine load			24.0...100.0 %	---
	Engine speed				760...6350 rpm	---

Note on display zones 3 and 4:

Display value should be 0.0 BTDC at idling speed.

Protected by copyright. Copying for private or commercial purposes, in part or in whole, is not permitted unless authorised by Volkswagen AG. Volkswagen AG does not guarantee or accept any liability with respect to the correctness of information in this document. Copyright by Volkswagen AG.
satelettronica

Evaluating display groups 22 and 23, display zones 3 and 4 - Retardation of ignition

Appears on display	Possible fault cause	Fault elimination
All cylinders greater than 12.0 °CA	- Knock sensor (G61) defective - Connector corroded	- Check knock sensor => Page 181
	- Knock sensor (G61) incorrectly tightened	- Loosen knock sensor and tighten to 20 Nm
	- Ancillary components on engine loose	- Tighten ancillary components
	- Poor fuel quality	- Change type of fuel
One cylinder deviates greatly from the others	- Connector corroded	- Check knock sensors => Page 181
	- Engine damaged	- Check compression pressures: => Repair group 15; Removing and installing cylinder head; Checking compression pressure Checking compression pressure
	- Ancillary components on engine loose	- Tighten ancillary components

10 - Evaluating measured value blocks, display groups 30...49 -Lambda regulation-

10.1 - Evaluating measured value blocks, display groups 30...49 -Lambda regulation-

Display group 30 -Lambda regulation-						
▪ Engine running at idling speed						
Read measured value block 30			⇒	◂ Indicated on display		
xxx	xxx					
1	2	3	4	◂ Display zones	Specification	Evaluation
		Status of Lambda regulation after catalyst			111	=> Page 59
	Status of Lambda regulation before catalyst				111	=> Page 59

Note on display zone 2:

The 3rd digit of the 3 digit number block is set to 1 first in part load/throttle range.

Significance of figures in 3-digit number block, display zones 1 and 2 - status of Lambda regulation before and after catalyst

Significance if display = 1			
1	2	3	Status of Lambda regulation before and after catalyst
1			Lambda probe heating on
	1		Lambda probe operationally ready

Protected by copyright. Copyright by Volkswagen AG. Copy authorised by Volkswagen AG. Volkswagen AG does not guarantee or accept any liability with respect to the correctness of information in this document. Copy for private or commercial purposes, in part or in whole, is not permitted unless authorised by Volkswagen AG.
satelettronica

Significance if display = 1			
		1	Lambda regulation active

Display group 31 -Lambda regulation- constantly operating Lambda probes						
▪ Engine running at idling speed Read measured value block 31 ⇒ ◂ Indicated on display x.xxxx x.xxxx						
1	2	3	4	◂ Display zones	Specification	Evaluation
		Lambda specification, Bank 1			0.9900...1.0100	---
	Lambda actual value, Bank 1				0.9600...1.0400	---

Display group 32 -Lambda regulation- Learnt values for Lambda probe before catalyst						
▪ Engine running at idling speed Read measured value block 32 ⇒ ◂ Indicated on display xx.x % xx.x %						
1	2	3	4	◂ Display zones	Specification	Evaluation
		Lambda learnt value at part-throttle (multiplicative) before catalyst			-20.0...20.0 %	=> Page 60
	Lambda learnt value at idling speed (additive) before catalyst				-15.0...15.0 %	=> Page 60

Notes on display zones 1 and 2:

Low values indicate that the engine is running too rich and therefore the Lambda regulation is weakening the mixture.

- High values indicate that the engine is running too lean and therefore the Lambda regulation is enrichening the mixture.
- add = additive - The effects of the fault (e.g. unmetered air) will reduce as the engine speed increases. The injection period will be modified by a fixed amount for additive learnt values. This amount is not dependent upon the basic injection period.
- mul = multiplicative - The effects of the fault (e.g. faulty injector) will increase as the engine speed increases. A multiplicative learnt value is a proportional change to the injection period. This change is dependent on the basic injection period.

Evaluating display group 32, display zones 1 and 2 - Lambda learnt values before catalyst

Appears on display	Possible fault cause	Fault elimination
Low Lambda learnt values	- Low learnt values at idling but with normal learnt values at part throttle: possible oil dilution (high level of fuel in oil)	- Disappears after motorway drive or oil change
	- Injector leaking	- Check injector =>Page 118
	- Air mass meter (G70) defective	- Check air mass meter => Page 102
	- Activated charcoal filter solenoid valve 1 (N80) permanently open	- Check activated charcoal filter solenoid valve 1 => Page 25 , Final control diagnosis
	- Lambda probe heating (Z19) defective or Lambda probe (G39) soiled	- Check Lambda probe heating beore catalyst =>Page 95

Protected by copyright. Copying for private or commercial purposes, in part or in whole, is not permitted unless authorised by Volkswagen AG. Volkswagen AG does not guarantee or accept any liability with respect to the correctness of information in this document. Copyright by Volkswagen AG.

satelettronica

		- Check Lambda probe and Lambda regulation before catalyst => Page 130
Continued =>next page		

Appears on display	Possible fault cause	Fault elimination
High Lambda learnt values	- High learnt values at idling speed, not so high learnt values at part throttle: possible unmetered air in area of intake manifold - Large amount of unmetered air between intake manifold and air mass meter	- Check intake air system for leaks =>Page 128
	- Injector blocked	- Check injectors =>Page 118
	- Air mass meter defective (G70)	- Check air mass meter => Page 102
	- Fuel pressure too low	- Check fuel pressure regulator and holding pressure => Page 125
	- Lambda probe heating (Z19) defective or Lambda probe (G39) soiled	- Check Lambda probe heating =>Page 95
		- Check Lambda probe and Lambda regulation before catalyst => Page 130
	- Unmetered air at exhaust manifold gasket	- Check exhaust system for leaks: => Repair group 26; Removing and installing parts of exhaust system

Display group 33 -Lambda regulation- Lambda regulation values before catalyst						
▪ Engine running at idling speed Read measured value block 33 xx,x %			⇒	◂ Indicated on display		
1	2	3	4	◂ Display zones	Specification	Evaluation
	Lambda regulation before catalyst				-10.0...10.0 %	=> Page 61

Notes on display zone 1:

The display must fluctuate at 0.0 %. If 0.0 % is displayed constantly, the Lambda regulation has switched from regulation to control because there is a fault in the Lambda regulation. Interrogate fault memory => Page 10 , Interrogating and erasing fault memory.

Evaluating display group 33, display zone 1 - Lambda regulator before catalyst

Appears on display	Possible fault cause	Fault elimination
Outside tolerance range	- Minus range: Mixture too rich, Lambda regulation weakens mixture - Positive range: Mixture too lean, Lambda regulation enriches mixture	- Wait 30 seconds until the display has stabilised
	- Injector defective	- Check injectors=> Page 118
	- Unmetered air	- Check air intake system for leaks => Page 128

Protected by copyright. Copyright by Volkswagen AG. Volkswagen AG does not guarantee or accept any liability with respect to the correctness of information in this document. Copying for private or commercial purposes, in part or in whole, is not permitted unless authorised by Volkswagen AG.
satelettronica

	- Lambda learnt value on limit	- Check Lambda learnt value in display group 32

Display group 41 -Lambda regulation- Lambda probe heating						
▪ Engine running at idling speed						
Read measured value block 41			⇒	◂ Indicated on display		
	Text	xxx	Text			
1	2	3	4	◂ Display zones	Specification	Evaluation
				Lambda probe heating after catalyst (Htg.aC.OFF / Htg.aC.ON)	Htg.aC.ON	---
				Internal resistance of Lambda probe after catalyst	up to 300 ω	---
				Lambda probe heating before catalyst (Htg.aC.OFF / Htg.aC.ON)	Htg.aC.ON	---

Note on display zone 3:

This value is temperature dependent. Specifications are for an engine at operating temperature.

Display group 43 -Lambda regulation- Lambda probe voltage						
▪ Engine running at idling speed						
Read measured value block 43			⇒	◂ Indicated on display		
xxxx rpm	xxx.x °C	x.xx V	Text			
1	2	3	4	◂ Display zones	Specification	Evaluation
				Result of Lambda probe diagnosis after catalyst (Test OFF / Test ON / B1-P2 OK / B1-P2 not OK)	---	---
				Lambda probe voltage Lambda probe after catalyst	0.00...1.00 V	=> Page 62
				Catalyst temperature	---	---
				Engine speed (idling speed)	760...880 rpm	=> Page 50

1) Up-to-date specifications:

=> Exhaust emissions test binder

Note on display group 60:

The Lambda regulation after catalyst is the primary system and is used to guide the Lambda regulation before catalyst. It corrects light rich and lean displacements of the Lambda probe before catalyst by means of map-dependent correction displacements (max. + / - 2.5 %).

Evaluating display group 43, display zone 3 - Lambda probe voltage, Lambda probe after catalyst

Appears on display	Possible fault cause	Fault elimination
Constant approx. 5.00 V	- Short to positive via: - Lambda probe, probe wiring, earth wiring, engine control unit	- Check wiring of Lambda probe after catalyst => Page 138
Constant 0.00 V	- Short to earth via: - Lambda probe, probe wiring, earth wiring, engine control unit	

Protected by copyright. Copying for private or commercial purposes, in whole or in part, is not permitted unless authorised by Volkswagen AG. Volkswagen AG does not guarantee or accept any liability with respect to the correctness of information in this document. Copyright by Volkswagen AG.
satelettronica

Constant between 0.39...0.50 V	- Open circuit via: - Lambda probe, probe wiring, earth wiring, engine control unit	

11 - Evaluating measured value blocks, display groups 50...69 -Speed regulation-

11.1 - Evaluating measured value blocks, display groups 50...69 -Speed regulation-

Display group 50 -Speed regulation- Operating condition						
▪ Engine running at idling speed						
Read measured value block 50 ⇒				◂ Indicated on display		
xxxx rpm	xxxx rpm	Text	Text			
1	2	3	4	◂ Display zones	Specification	Evaluation
				Air conditioning compressor operating mode (Compr. ON / Compr. OFF)	Compr. ON or Compr. OFF	---
				Air conditioning operating mode (on / off)	on or off	---
				Engine speed (idling speed specification) ▪ A/C compressor off ▪ A/C compressor on	760...880 rpm 850...950 rpm	---
				Engine speed (idling speed) ▪ A/C compressor off ▪ A/C compressor on	760...880 rpm 850...950 rpm	=> Page 50

1) Up-to-date specifications:

=> Exhaust emissions test binder

Note on display zone 2:

The specified engine speed from the engine control unit is displayed (temperature dependent internally calculated control unit value).

Notes on display zone 3:

- "Off" is always displayed for vehicles without air conditioning.
- Checking signal from and to air conditioner compressor =>Page 153 .

Notes on display zone 4:

- "Compr. OFF" is always displayed on vehicles without air conditioner.
- Checking signal from and to air conditioner compressor =>Page 153 .

Display group 54 -Speed regulation-						
▪ Whilst driving						
Read measured value block 54 ⇒				◂ Indicated on display		
xxxx rpm	Text	xxx %	xxx.x %			
1	2	3	4	◂ Display zones	Specification	Evaluation
				Throttle valve angle sender 1 for throttle valve drive (G187)	0.0...100.0 %	---
				Accelerator pedal position sender 1 (G79)	0...100%	---

Protected by copyright. Copyright by Volkswagen AG.
Volkswagen AG, Wolfsburg
Volkswagen AG does not guarantee or accept any liability with respect to the correctness of information in this document. Copyright by Volkswagen AG.
This document is authorised only for internal purposes, in part or in whole, is not permitted unless authorised by Volkswagen AG. Volkswagen AG does not guarantee or accept any liability with respect to the correctness of information in this document. Copyright by Volkswagen AG.
satelettronica

	Operating mode: Idle, part throttle, enrichment, overrun, full throttle	---	---
	Engine speed	760...6350 rpm	---

Note on display zones 3 and 4:

The max. and min. specifications given are not reached fully.

Display group 55 -Speed regulation- Idling stabilisation						
▪ Engine running at idling speed						
Read measured value block 55			⇒	◂ Indicated on display		
xxxx rpm	xx %	xx.x %	xxxxx			
1	2	3	4	◂ Display zones	Specification	Evaluation
				Operating mode	0x0x0	=> Page 64
			Idling speed stabilisation learnt value		-10.0...10.0%	---
		Idling speed regulation			-10...20 %	---
	Engine speed (idling speed)				760...880 rpm	=> Page 50

1) Up-to-date specifications:

=> Exhaust emissions test binder

Note on display zone 3:

Displayed is the amount that the idling speed stabilisation has moved away from the prescribed average. For a new engine the values lie in the positive range, because of the higher friction and in the negative range with an engine that has run-in.

Significance of figures in 5-digit number block, display zone 4 - operating modes

Significance if display = 1					
1	2	3	4	5	Operating mode
1					Power assisted steering pressure switch (F88) on
	x				Not relevant
		1			Air conditioning system switched on
			x		Not relevant
				1	Air conditioner compressor switched on

Display group 56 -Speed regulation- Idling speed stabilisation						
▪ Engine running at idling speed						
Read measured value block 56			⇒	◂ Indicated on display		
xxxx rpm	xxxx rpm	xx %	xxxxx			
1	2	3	4	◂ Display zones	Specification	Evaluation
				Operating modes	0x0x0	=> Page 64
			Idling speed regulation		-10...20 %	---
		Engine speed (idling speed specification)			760...880 rpm	---

satelettronica

Engine speed (idling speed)	760...880 rpm	=> Page 50

1) Up-to-date specifications:

=> Exhaust emissions test binder

Note on display zone 2:

The specified engine speed from the engine control unit is displayed (temperature dependent internally calculated control unit value).

Display group 57 -Speed regulation- Idling speed stabilisation						
▪ Engine running at idling speed						
Read measured value block 57			⇒	◂ Indicated on display		
xxxx rpm	xxxx rpm	Text	xx %			
1	2	3	4	◂ Display zones	Specification	Evaluation
				A/C operating mode ▪ Air conditioning off ▪ Air conditioning on	0...2 % 15...80 % (fluctuates)	---
				A/C compressor operating mode (Compr. ON / Compr. OFF)	Compr. ON or Compr. OFF	---
				Engine speed (idling speed specification) ▪ A/C compressor off ▪ A/C compressor on	760...880 rpm 850...950 rpm	---
				Engine speed (idling speed) ▪ A/C compressor off ▪ A/C compressor on	760...880 rpm 850...950 rpm	=> Page 50

1) Up-to-date specifications:

=> Exhaust emissions test binder

Note on display zone 2:

The specified engine speed from the engine control unit is displayed (temperature dependent internally calculated control unit value).

Notes on display zone 3:

- "Compr. OFF" is always displayed on vehicles without air conditioner.
- Checking signal from and to air conditioner compressor =>Page 153 .

Notes on display zone 4:

- "0 %" is always displayed for vehicles without air conditioning.
- Checking signal from and to air conditioner compressor =>Page 153 .

Display group 60 -Speed regulation- Adaption EPC system 1)						
▪ Ignition on, engine not running						
▪ Control unit in mode 04 basic setting						
Read measured value block 60			⇒	◂ Indicated on display		
xxx.x %	xxx.x %	x	Text			
1	2	3	4	◂ Display zones	Specification	Evaluation
				Adaption condition (ADP runs / ADP OK / ADP ERROR)	ADP OK	---
				Learning step counter	0...8	---

satelettronica

	Throttle valve angle Throttle valve drive angle sender 2 for (G188)	100.0...0.0 %	---
	Throttle valve angle Throttle valve drive angle sender 1 (G187)	0.0...100.0 %	---

1) Erase learnt values and adapt engine control unit to throttle valve control part and exhaust gas recirculation valve => Page 147 .

Note on display group 60:

- Matching the throttle valve control part is performed with ignition switched on.
- Engine control unit is adapted to throttle valve control unit when selecting display group 60 under function 04 "Basic setting". This adaption must always be carried out when another throttle valve control part (or another complete engine) or another engine control unit is fitted.
- The throttle valve control part angle senders counter oppose one another. The values of both senders added together always equal approx. 100 %.
- The specifications indicated in display zones 1 and 2 do not fully reach the max. min. figures.
- During adaption the counter in display zone 3 counts up from 0 to 8.

Display group 62 -Speed regulation- Electronic accelerator system						
▪ Ignition on, engine not running						
Read measured value block 62 ⇒				◂ Indicated on display		
xxx.x %	xxx.x %	xxx.x %	xxx.x %	◂ Display zones	Specification	Evaluation
1	2	3	4	Accelerator pedal position sender 2 (G185)	3.0...48.0 %	---
				Accelerator pedal position sender 1 (G79)	6.0...96.0 %	---
				Throttle valve angle Throttle valve drive angle sender 2 for (G188)	100.0...0.0 %	---
				Throttle valve angle Throttle valve drive angle sender 1 (G187)	0.0...100.0 %	---

Notes on display group 62:

- The throttle valve control part potentiometer and the pedal value sender are installed in pairs for reasons of safety. The engine control unit continually checks the plausibility of the potentiometer.
- The value from accelerator pedal position sender 2 (G185) must always display approx. half the value from accelerator pedal position sender 1 (G79).
- The throttle valve control part angle senders counter oppose one another. The values of both senders added together always equal approx. 100 %.
- The specifications do not fully reach the max. min. figures.

Display group 66 -Idling regulation- Additional signals						
▪ Ignition on, engine not running						
Read measured value block 66 ⇒				◂ Indicated on display		
xxx km/h	xxxx	xxx km/h	xxxx	◂ Display zones	Specification	Evaluation
1	2	3	4	Value displayed has no significance	ignore	---
				Value displayed has no significance	ignore	---
				Switch position from: ▪ Clutch pedal switch (F36) ▪ Brake light switch (F) and brake pedal switch(F47)	x000	=> Page 67
				Road speed (actual)	0 km/h	---

satelettronica

Notes on display zone 1:

Checking road speed signal => Page 150

Notes on display zone 2:

- Checking signal from clutch pedal switch => Page 157
- Checking signal from brake light switch and brake pedal switch => Page 160

Significance of the figures in the 4 digit display, display zone 2 - switch positions

Significance if display = 1				
1	2	3	4	Significance
x				No significance
	1			Clutch depressed (clutch pedal switch -F36)
		1		Brake depressed (brake pedal switch -F47)
			1	Brake depressed (brake light switch -F)

12 - Evaluating measured value blocks, display groups 70...79 -Reducing emissions-

12.1 - Evaluating measured value blocks, display groups 70...79 -Reducing emissions-

Protected by copyright. Copying for private or commercial purposes, in part or in whole, is not permitted unless authorised by Volkswagen AG. Volkswagen AG does not guarantee or accept any liability with respect to the correctness of information. Copyright by Volkswagen AG.

Display group 74 -Reducing emissions- EGR-position adaption1)						
▪ Ignition on, engine not running ▪ Control unit in mode 04 basic setting						
Read measured value block 74 ⇒				◂ Indicated on display		
xx.x V	xx.x V	xxx.x %	Text			
1	2	3	4	◂ Display zones	Specification	Evaluation
				Adaption condition (ADP runs / ADP OK / ADP ERROR)	ADP OK	---
				Actual potentiometer value	0.0...100.0%	---
		Max. stop			3.0...4.8 V	---
	Zero position				0.3...1.5 V	---

1) Erase learnt values and adapt engine control unit to throttle valve control part and exhaust gas recirculation valve => Page 147 .

Notes on display group 74:

- Adaption of exhaust gas recirculation valve takes place when ignition is switched on.
- When selecting function 04 "basic settings" of display group 74, the engine control unit is adapted to the exhaust gas recirculation valve. This process must be carried out if another exhaust gas recirculation valve (or a complete engine) or another engine control unit has been fitted.

satelettronica

13 - Evaluating measured value blocks, display groups 91...95 -Performance increase-

13.1 - Evaluating measured value blocks, display groups 91...95 -Performance increase-

Display group 95 -variable intake manifold- single stage changeover						
▪ Engine running at idling speed						
Read measured value block 95			⇒	◂ Indicated on display		
xxxx rpm	xxx.x %	xxx.x °C	Text			
1	2	3	4	◂ Display zones	Specification	Evaluation
				Variable intake manifold status (ON / OFF)	ON or OFF	---
			Coolant temperature		80.0...110.0 °C	=> Page 52
		Engine load			---	---
	Engine speed (idling speed)				760...2000 rpm	---

Note on display zone 4:

With a throttle burst of up to approx. 2000 rpm, the variable intake manifold changeover must switch from OFF to ON.

14 - Evaluating measured value blocks, display groups 120...129 - Communication-

14.1 - Evaluating measured value blocks, display groups 120...129 -Communication-

Display group 125 -Communication -data bus messages-						
▪ Engine running at idling speed						
Read measured value block 125			⇒	◂ Indicated on display		
Text		Text				
1	2	3	4	◂ Display zones	Specification	Evaluation
			Status combi-instrument		Combi 1	---
	Status ABS				ABS 1	---

Note on display group 125:

Specification = 1; Control units with active data bus are displayed.

satelettronica

24 - Mixture preparation, Injection

1 - Servicing injection system

1.1 - Servicing injection system

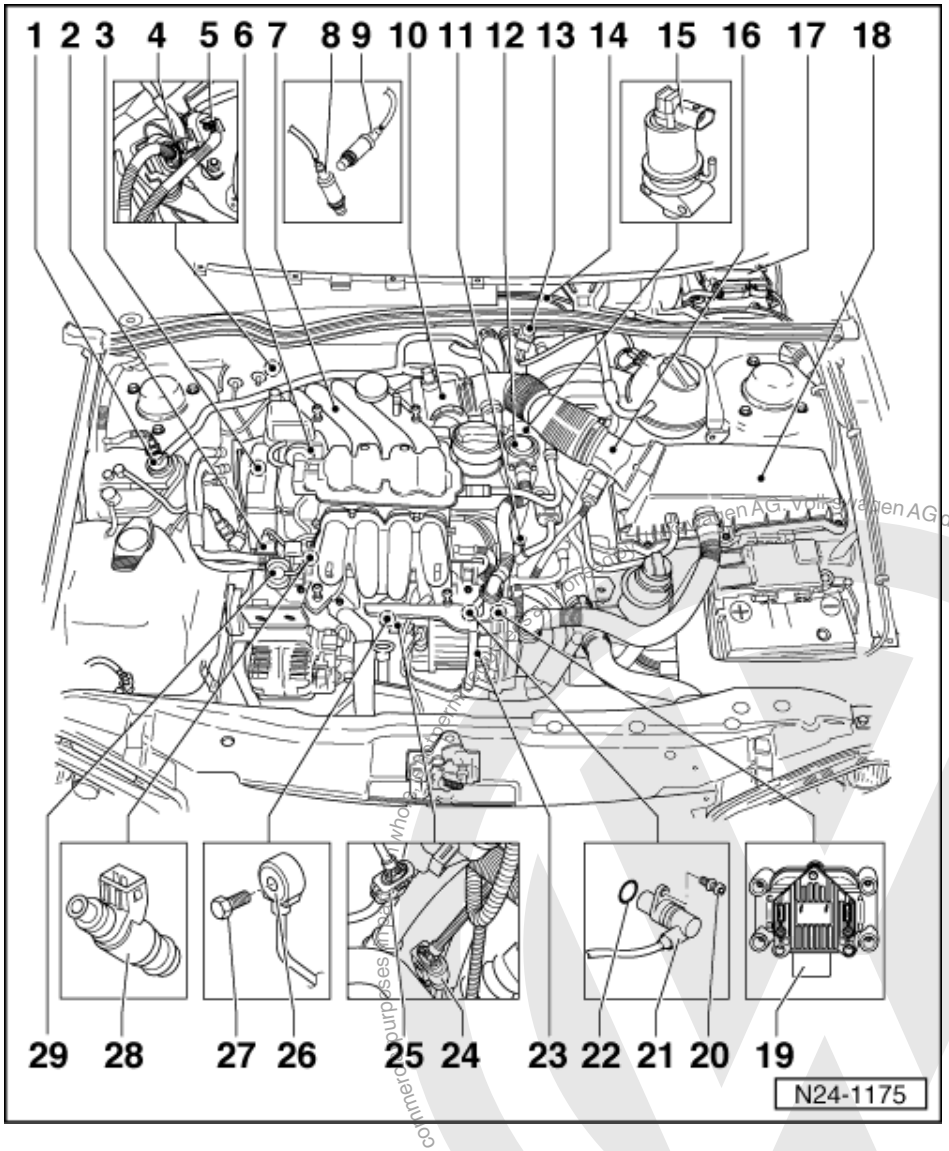

1.2 - Fitting locations overview

1 Activated charcoal filter solenoid valve 1 (N80)
- Checking => Page 25 , Final control diagnosis
- Activated charcoal filter system

=> Repair group 20; Activated charcoal filter system; Servicing parts of the activated charcoal filter system
Activated charcoal filter system Servicing parts of the activated charcoal filter system

2 Connector
- Black, 3-pin
- For Hall sender (G40)

satelettronica
Copyright by Volkswagen AG, Volkswagen AG does not guarantee or accept any liability with respect to the correctness of information in this document.
Protected by copyright. Copying for private or commercial purposes, in whole or in part, is not permitted unless authorised by Volkswagen AG.

Protected by copyright. Copyright by Volkswagen AG. Volkswagen AG does not guarantee or accept any liability with respect to the correctness of information in this document. Copyright by Volkswagen AG.

- Contacts gold plated

3 Hall sender (G40)
- => Page 174 , item 12

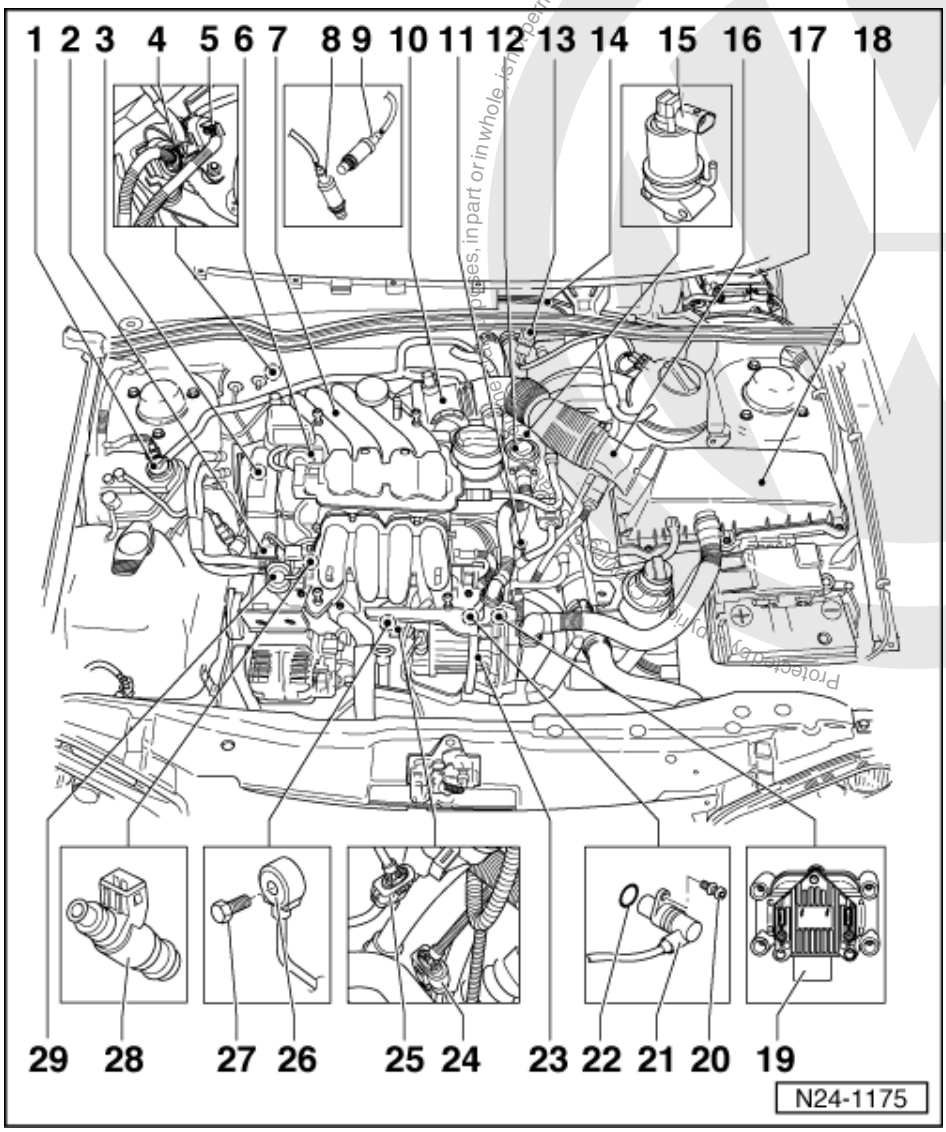

4 6-pin connector
- Black
- Contacts gold plated
- For Lambda probe 1 before catalyst (G39) and Lambda probe heater (Z19)

5 4-pin connector
- Black
- Contacts 3 and 4 gold-plated
- For Lambda probe 2 after catalyst (G130) and Lambda probe heating (Z29)

6 Vacuum control element
- With intake manifold change-over valve (N156)
- Checking intake manifold change-over valve => Page 141

7 Intake manifold - upper part
- Dismantling and assembling => Page 86

satelettronica

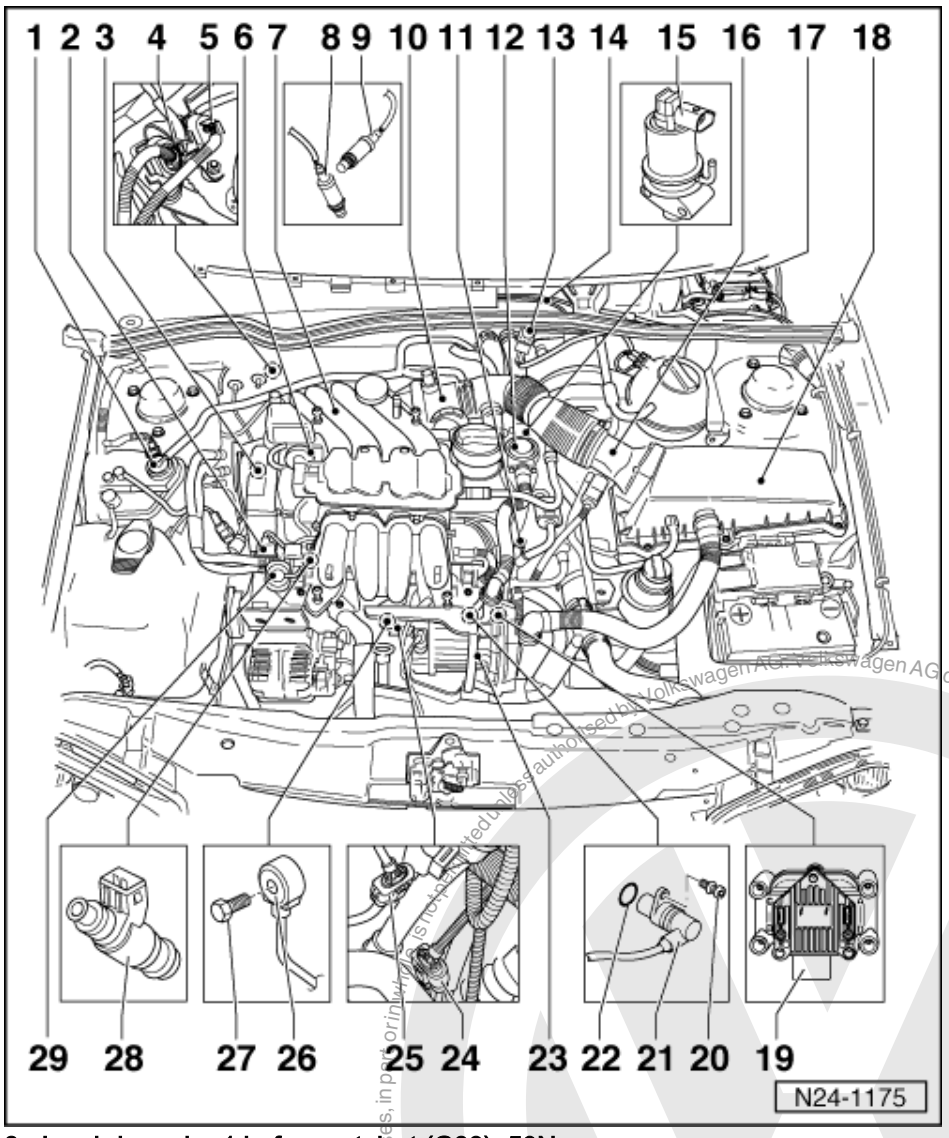

8 Lambda probe 1 before catalyst (G39), 50Nm

- Constantly operating Lambda probe
- Fitting location: In exhaust manifold
- Remove and install with Lambda probe open ring spanner set 3337
- If renewed, erase learnt values and adapt engine control unit to throttle valve control part=> Page 147
- Grease only the threads with "G 052 112 A3"; "G 052 112 A3" must not get into the slots on the probe body
- Probe heating voltage supply via fuel pump relay (J17)
- Checking Lambda probe heating before catalyst => Page 95
- Checking Lambda probe and Lambda regulation before catalyst => Page 130

Protected by copyright. Copyright by Volkswagen AG.
Volkswagen AG does not guarantee or accept any liability with respect to the correctness of information in this document. Copyright by Volkswagen AG.
satelettronica

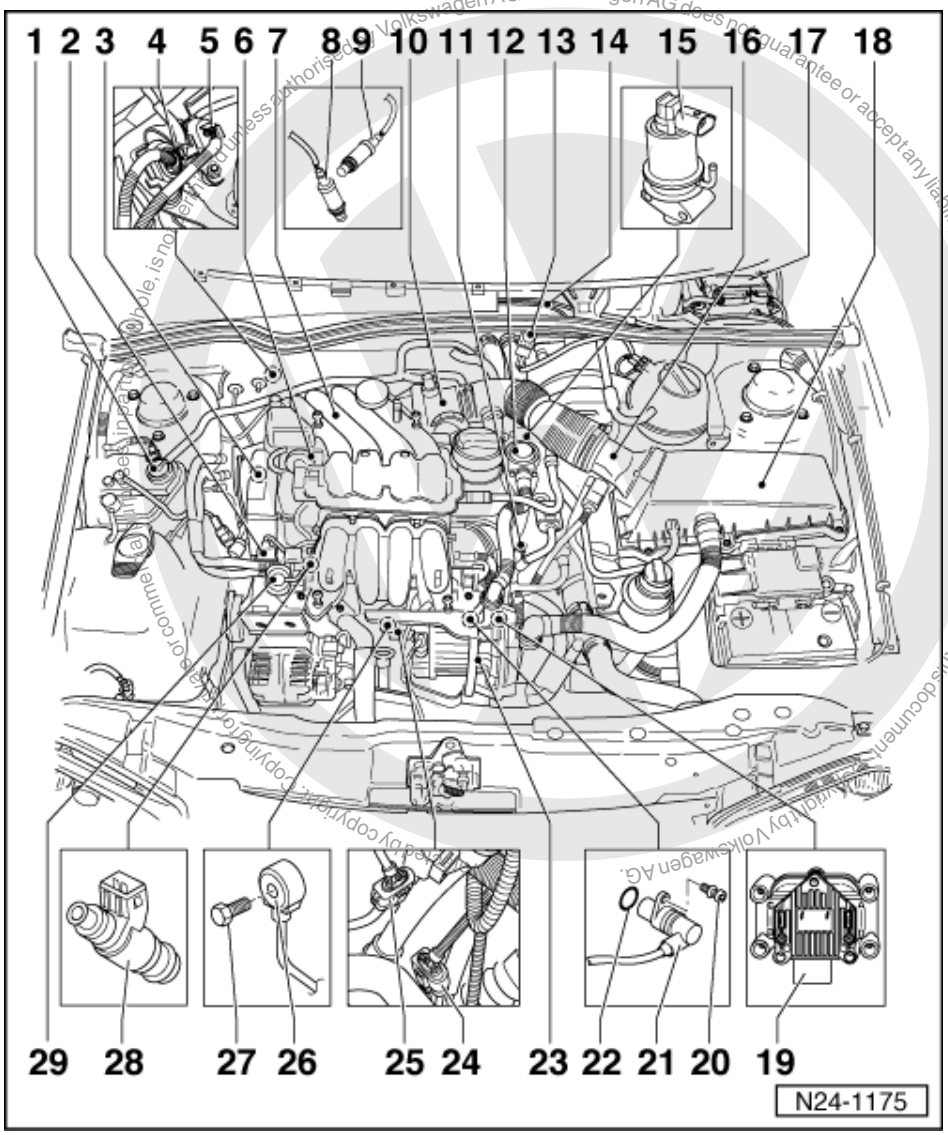

9 Lambda probe 2 after catalyst (G130)*, 50Nm

- Location: Behind catalyst
- Remove and install with Lambda probe open ring spanner set 3337
- If renewed, erase learnt values and adapt engine control unit to throttle valve control part=> Page 147
- Grease only the threads with "G 052 112 A3"; "G 052 112 A3" must not get into the slots on the probe body
- Probe heating voltage supply via fuel pump relay (J17)
- Checking Lambda probe heating for Lambda probe after catalyst => Page 98
- Checking Lambda probe and Lambda regulation after catalyst => Page 135

satelettronica

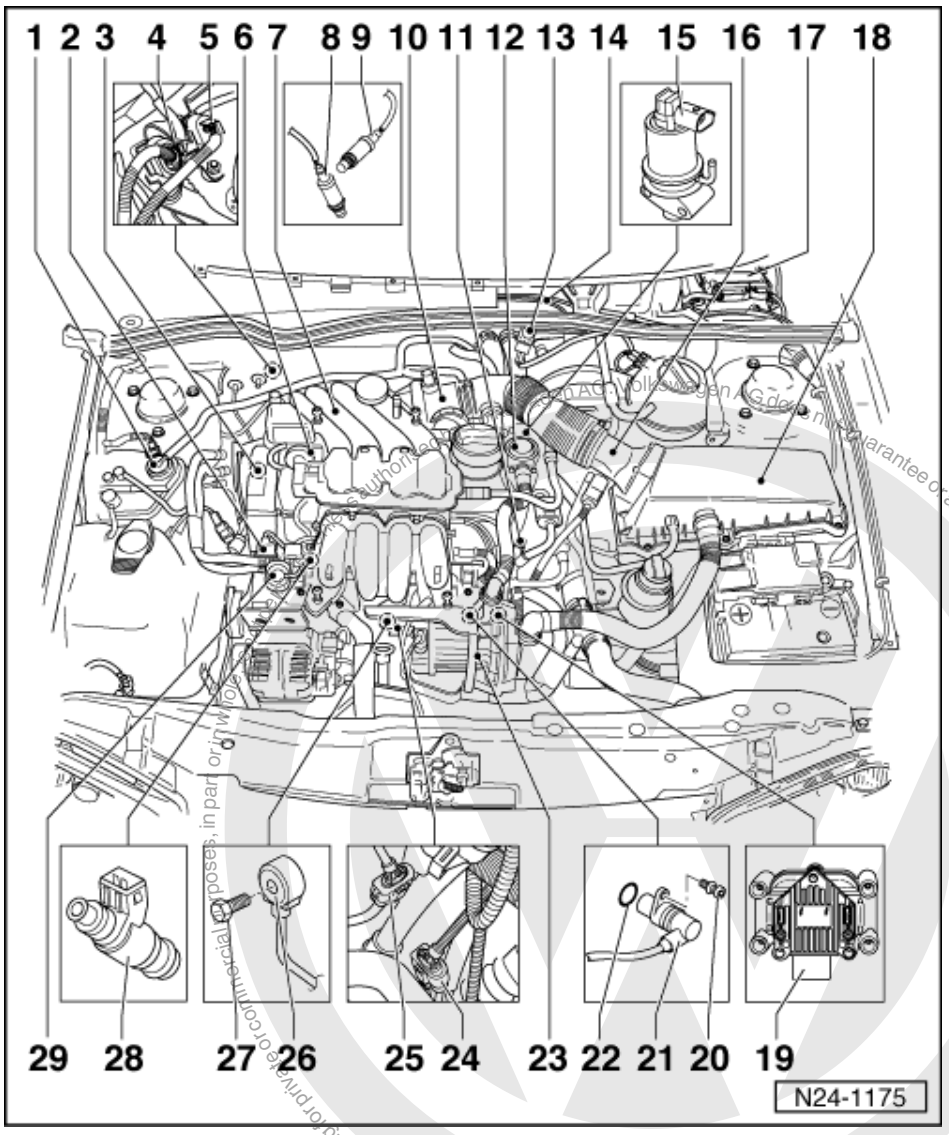

10 Throttle valve control part (J338)

- If renewed, erase learnt values and adapt engine control unit to throttle valve control part=> Page 147

11 Coolant temperature sender (G62)

- With coolant temperature gauge sender (G2)

12 Combi-valve

- Secondary air system:

=> Repair group 26; Secondary air system; Removing and installing parts of secondary air system Secondary air system Removing and installing parts of secondary air system

13 Secondary air inlet valve (N112)

- Checking => Page 25 , Final control diagnosis
- Secondary air system:

=> Repair group 26; Secondary air system; Removing and installing parts of secondary air system Secondary air system Removing and installing parts of secondary air system

satelettronica

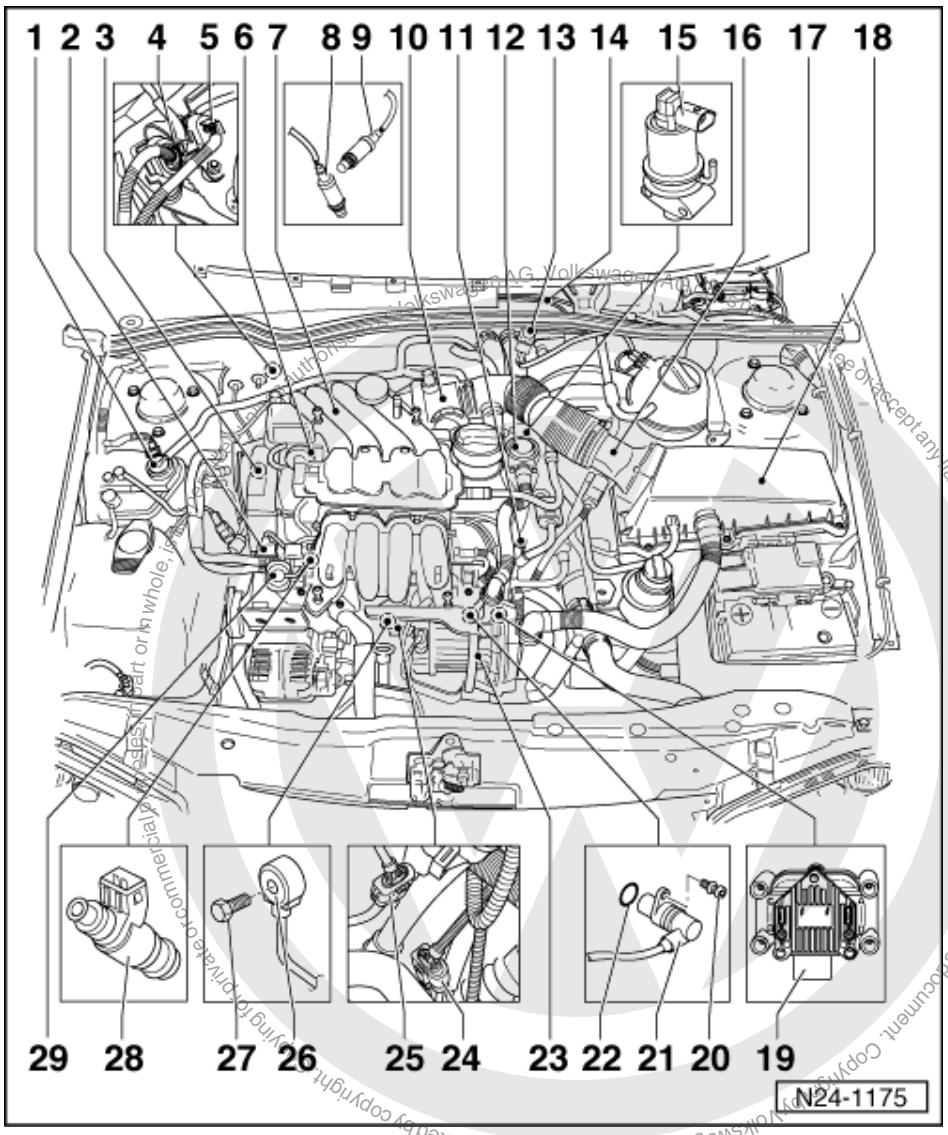

Protected by copyright. Copying for private or commercial purposes, in part or in whole, is not permitted unless authorised by Volkswagen AG. Volkswagen AG does not guarantee or assume any liability with respect to the correctness of information in this document. Copyright by Volkswagen AG.

14 Earth connection

- Fitting location: In plenum chamber

15 Exhaust gas recirculation valve (N18)

- With exhaust gas recirculation potentiometer (G212)
- If renewed, erase learnt values and adapt engine control unit to throttle valve control part=> Page 147
- Check exhaust gas recirculation valve (N18) => Page 25 , Final control diagnosis
- Check exhaust gas recirculation potentiometer (G212):

=> Repair group 26; Exhaust gas recirculation system Exhaust gas recirculation system

16 Air mass meter (G70) with intake air temperature sender (G42)

satelettronica

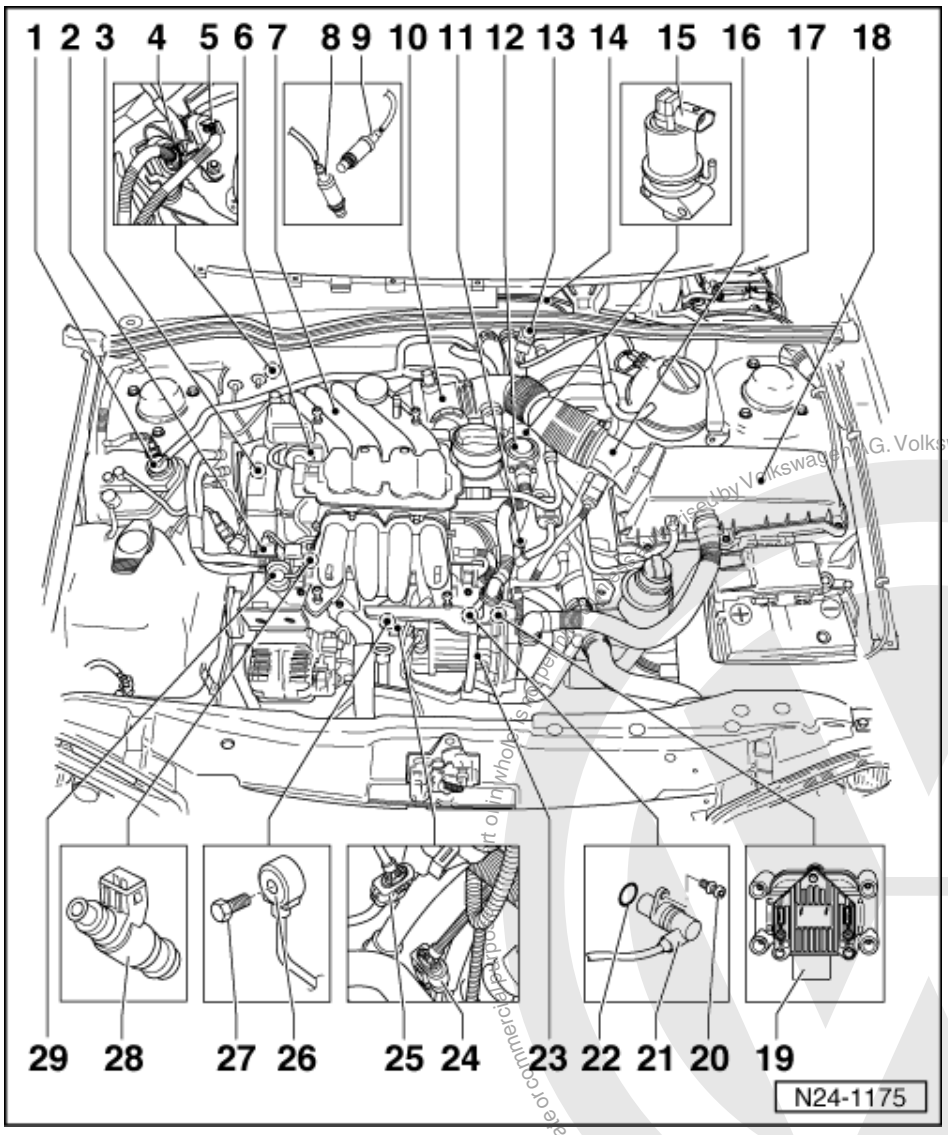

17 Engine control unit

(Control unit for Simos injection and ignition system -J361)

- Disconnect or connect only with ignition switched off
- Checking voltage supply => Page 143
- Renew => Page 145
- If renewed, erase learnt values and adapt engine control unit to throttle valve control part=> Page 147

18 Air cleaner

19 Ignition transformer (N152)

- With output stage (N122)
- => Page 171 , item 1

20 10 Nm

21 Engine speed sender (G28)

22 O-ring

- Renew if damaged

Protected by copyright. Copyright by Volkswagen AG. Volkswagen AG does not guarantee or accept any liability with respect to the correctness of information in this document. Copyright by Volkswagen AG. Reproduction or transmission to anyone else or commercial use of this document or its contents is not permitted without express written consent.
satelittorica

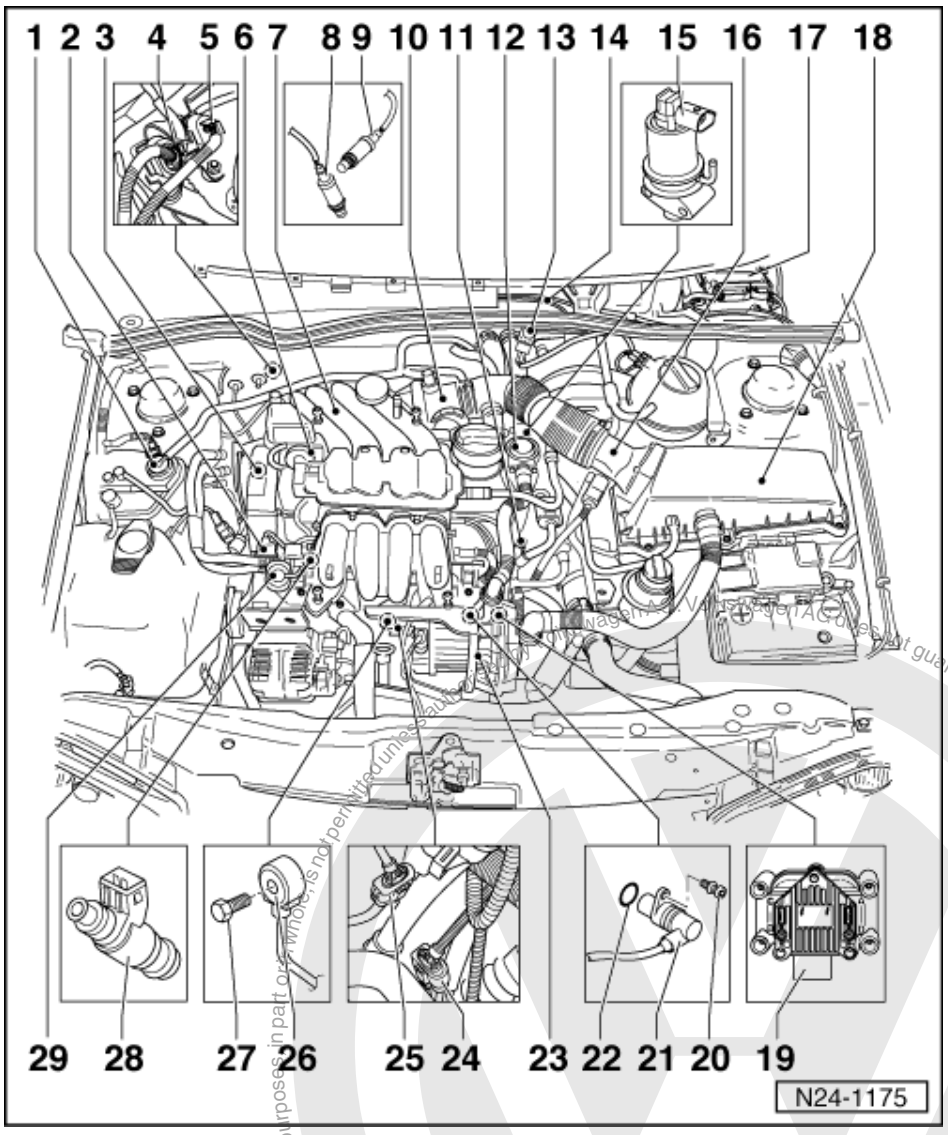

23 Secondary air pump motor (V101)

- Checking => Page 25 , Final control diagnosis
- Secondary air system:

=> Repair group 26; Secondary air system; Removing and installing parts of secondary air system Secondary air system Removing and installing parts of secondary air system

24 3 pin connector

- Grey
- For engine speed sender (G28)

25 3 pin connector

- Black
- For knock sensor 1 (G61)
- Contacts gold plated

26 Knock sensor 1 (G61)

- => Page 172 , item 5

satelettronica

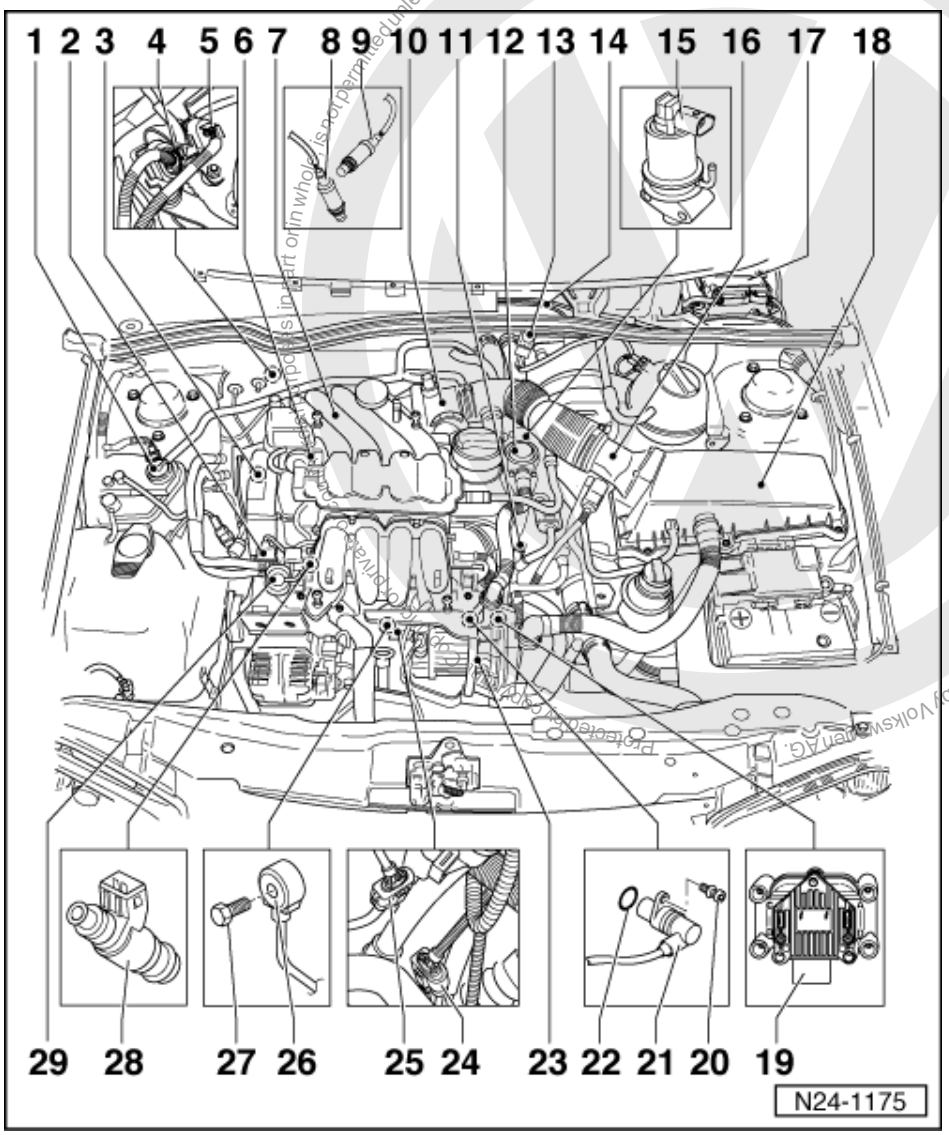

27 20 Nm

- Tightening torque influences the function of the knock sensor

28 Injector (N30...N33)

- If renewed, erase learnt values and adapt engine control unit to throttle valve control part=> Page 147

29 Fuel pressure regulator

1.3 - General notes on injection

Servicing ignition part:

=> Repair group 28

- The engine control unit is equipped with self-diagnosis. Before carrying out repairs and fault finding the fault memories of all control units must be interrogated. This is necessary because various control units are interconnected via a data bus. Also the vacuum hoses and connections must be checked (unmetered air).
- Disconnecting and connecting the battery must only be done with the ignition switched off, otherwise the engine control unit could be damaged.
- Fuel hoses in engine compartment must only be secured with spring type clips. The use of clamp or screw type clips is not permissible.
- Components marked with * are checked via the self diagnosis
  => Page 10 , interrogating and erasing fault memory.

satelettronica

- Components marked with **can be checked with the final control diagnosis => Page 25 .
- For trouble-free operation of the electrical components, a voltage of at least 11.5 V is necessary.
- Do not use sealants containing silicone. Particles of silicone drawn into the engine, will not be burnt in the engine and damage the Lambda probe.
- If the engine starts, runs for a short period and then stops after fault finding, repairs or component tests, then the fault may lie with the immobilizer which is blocking the engine control unit. The fault memory must be interrogated and if necessary the control unit matched:

=> Electrical system; Repair group 01; Immobilizer self-diagnosis; Adaption following renewal of engine control unit Immobilizer self-diagnosis Adaption following renewal of engine control unit

- During some checks it is possible that the control unit will recognise and store a fault. Therefore after completing all checks and repairs the fault memory must be interrogated and if necessary erased.
  => Page 10 , interrogating and erasing fault memory

Safety precautions =>Page 93
Rules for cleanliness => Page 94
Technical data => Page 94
Checking intake system for leaks (unmetered air) => Page 128 .
Checking engine operating mode => Page 139

1.4 - Removing and installing parts of the injection system

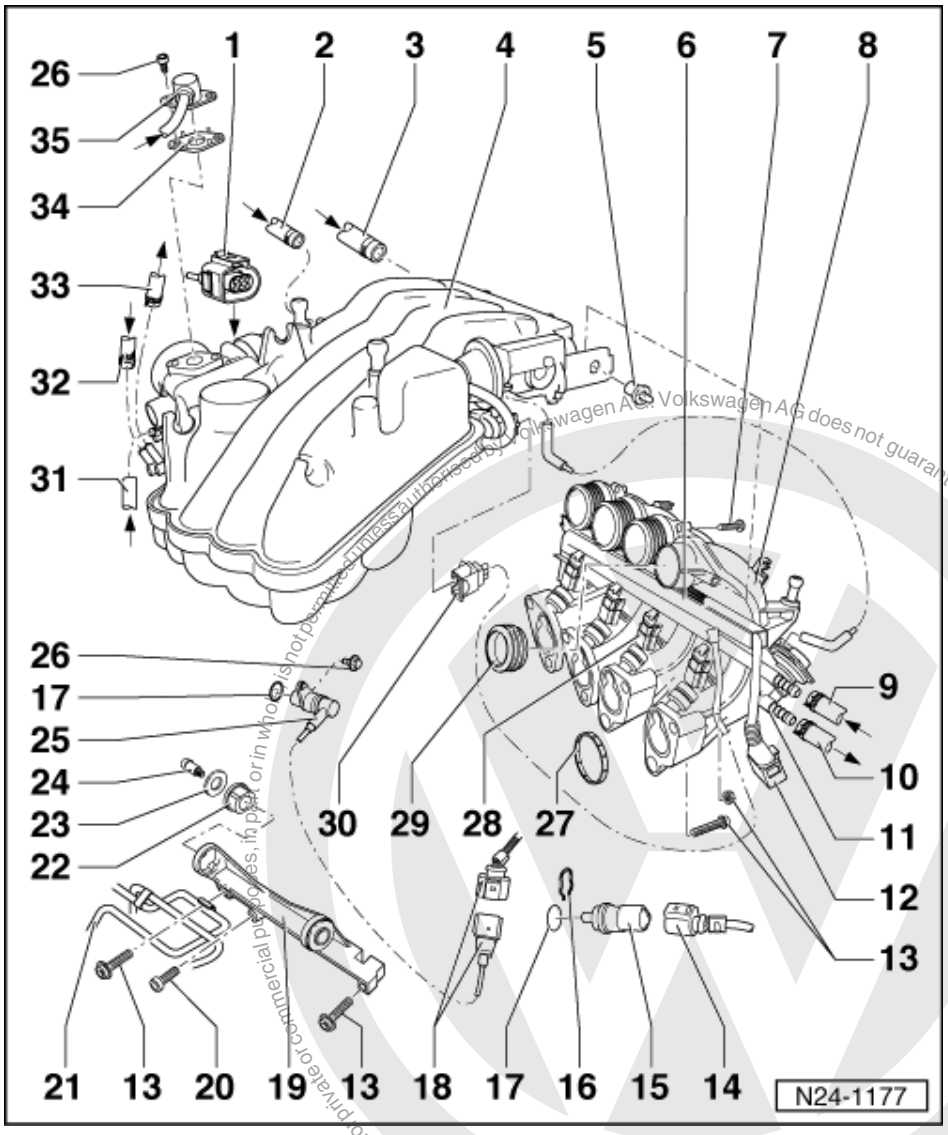

satelettronica
Volkswagen AG does not guarantee or accept any liability with respect to the correctness of information in this document. Copyright by Volkswagen AG.
Protected by copyright. Copying for private or commercial purposes, in part or in whole, is not permitted unless authorised by Volkswagen AG.

1 Connector
- Black, 6-pin
- For throttle valve control part (J338)
- Contacts gold plated

2 Vacuum hose
- From intake hose
  => Page 91 , item 2

3 From brake servo
- Secure with spring-type clips

4 Intake manifold - upper part
- With twin path intake manifold change-over
- Dismantling and assembling => Page 86

5 Spreader rivet

6 Cable channel

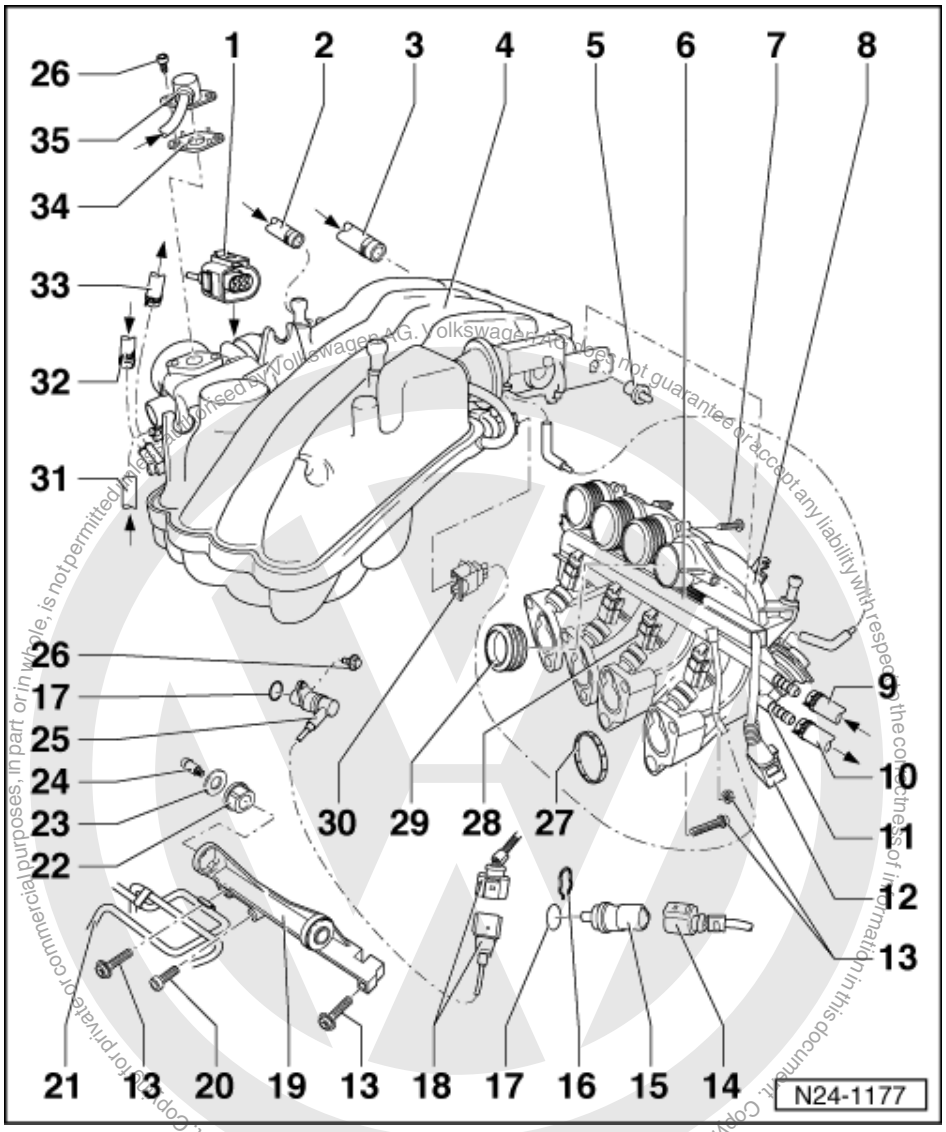

7 3 Nm

8 Intake manifold - lower part

9 Supply pipe/hose
- Black with white marks
- Secure with spring-type clips
- Check securely seated

satelettronica

- From fuel filter:

=> Repair Group 20; Removing and installing parts of fuel supply system; Removing and installing fuel tank with attachments and fuel filter Removing and installing parts of fuel supply system Removing and installing fuel tank with attachments and fuel filter

10 Return pipe

- Blue or with blue marking
- Secure with spring-type clips
- Check securely seated
- To the fuel delivery unit in fuel tank

=> Repair Group 20; Removing and installing parts of fuel supply system; Removing and installing fuel tank with attachments and fuel filter Removing and installing parts of fuel supply system Removing and installing fuel tank with attachments and fuel filter

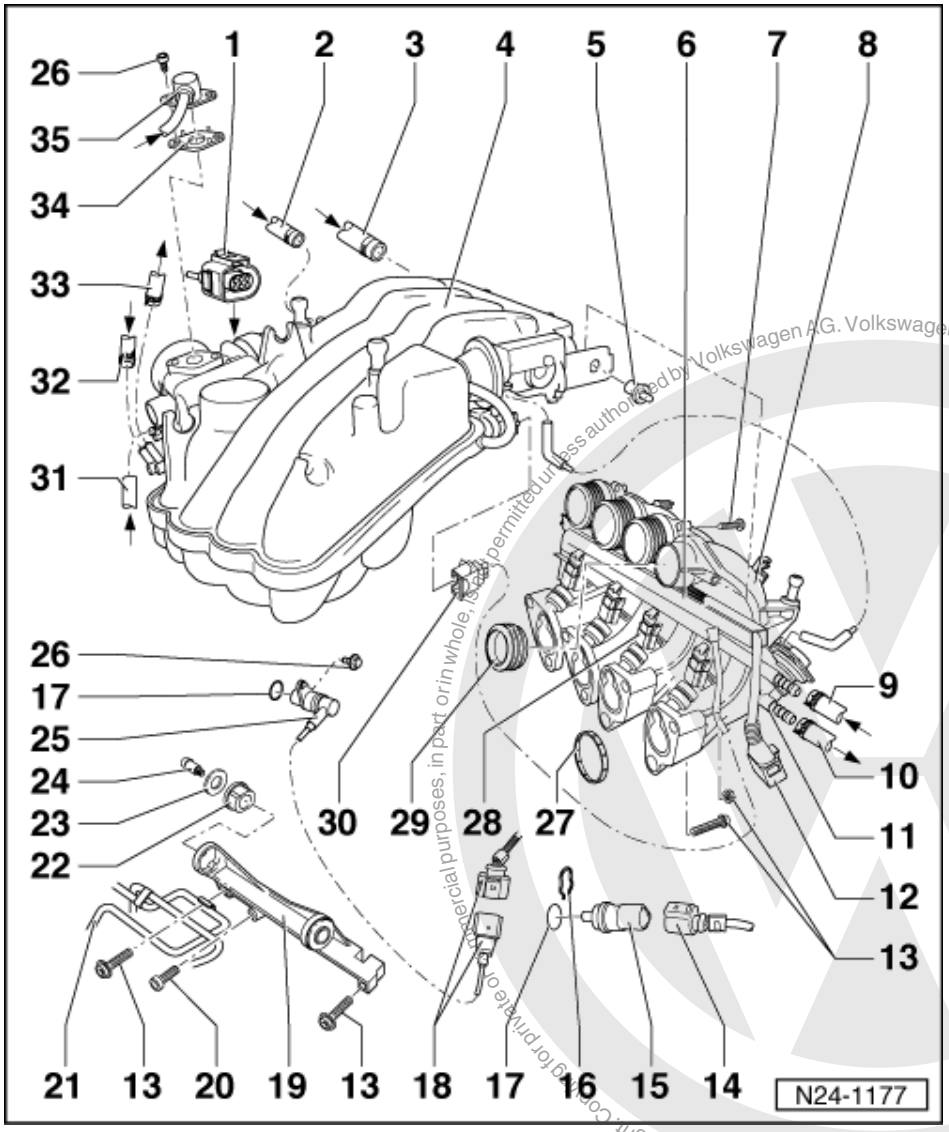

11 Fuel rail with injectors

- Dismantling and assembling => Page 88

12 Connector

- Black, 3-pin
- For Hall sender (G40)
- Contacts gold plated

13 15 Nm

14 Connector

Protected by copyright. Copying for private or commercial purposes, in part or in whole, is not permitted unless authorised by Volkswagen AG. Volkswagen AG does not guarantee or accept any liability with respect to the correctness of information in this document. Copyright by Volkswagen AG.
satelettronica

- Black, 4-pin
- For coolant temperature sender (G62) and coolant temperature gauge sender (G2)

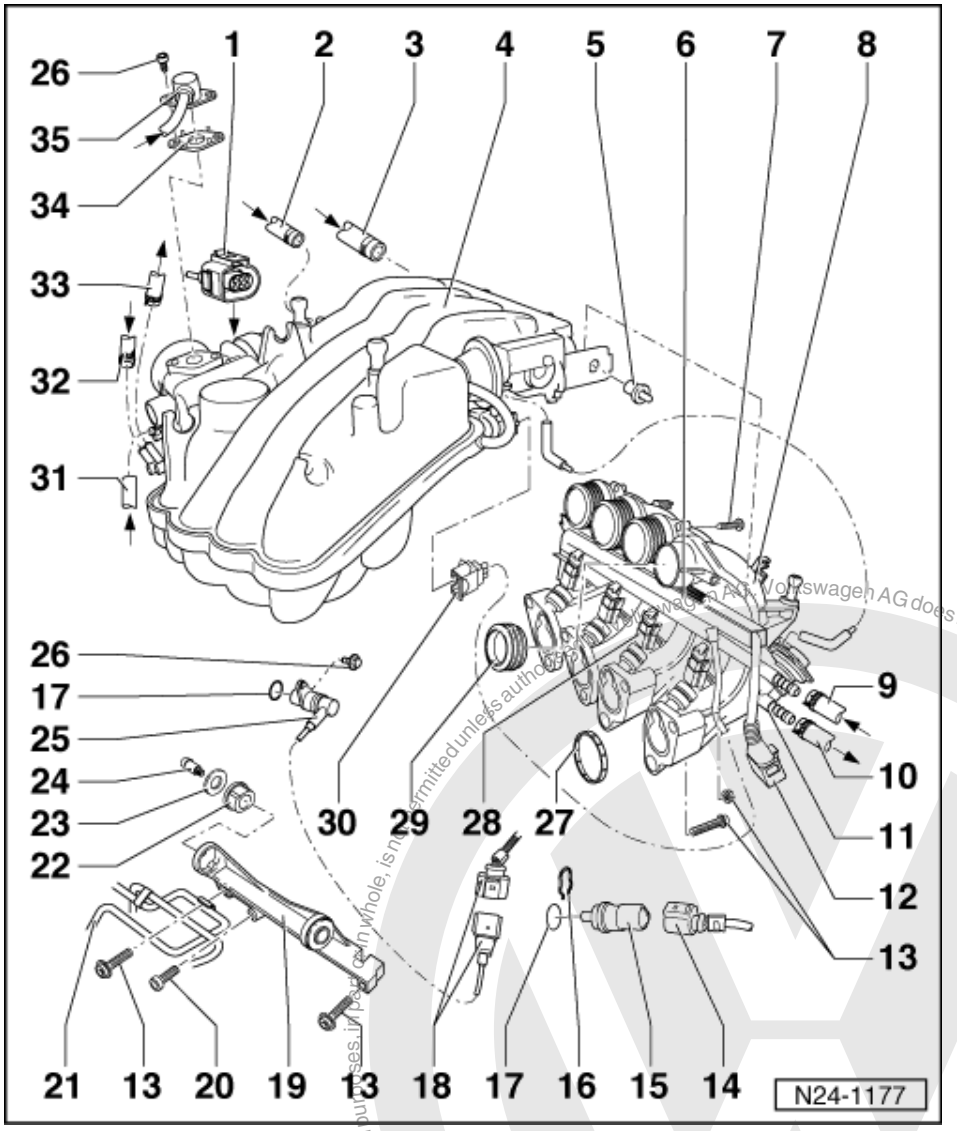

15 Coolant temperature sender (G62)*

- Fitting location => Page 69 , fitting location overview
- Black
- For engine control unit
- With coolant temperature gauge sender (G2)
- Checking =>Page 113
- If necessary release pressure in cooling system before removing

16 Retaining clip

- Check seated securely

17 O-ring

- Renew if damaged

18 3 pin connector

- Fitting location => Page 69 , engine compartment overview
- Grey
- For engine speed sender (G28)

satelettronica
Protected by copyright. Copyright by Volkswagen AG.
Copyright by Volkswagen AG does not guarantee or accept any liability with respect to the correctness of information in this document.

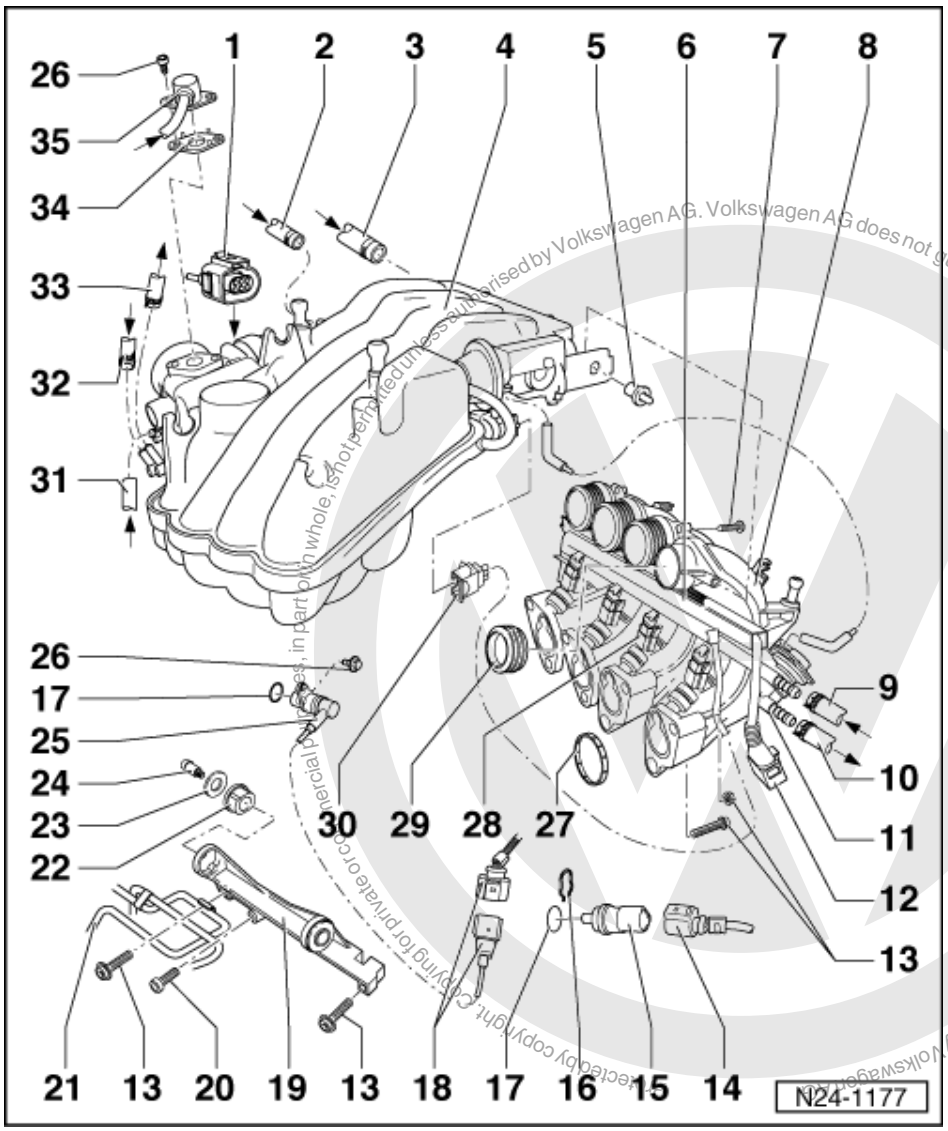

19 Support

- Between intake manifold and cylinder head

20 8 Nm

- To secure breather connection

21 Connecting pipe

- Removing and installing:

=> Repair group 26; Exhaust gas recirculation system; Servicing parts of the exhaust gas recirculation system Exhaust gas recirculation system Servicing parts of the exhaust gas recirculation system

22 Rubber bush

23 Washer

24 8 Nm

25 Engine speed sender (G28)*

- Fitting location => Page 69 , engine compartment overview
- Checking => Page 116

satelettronica

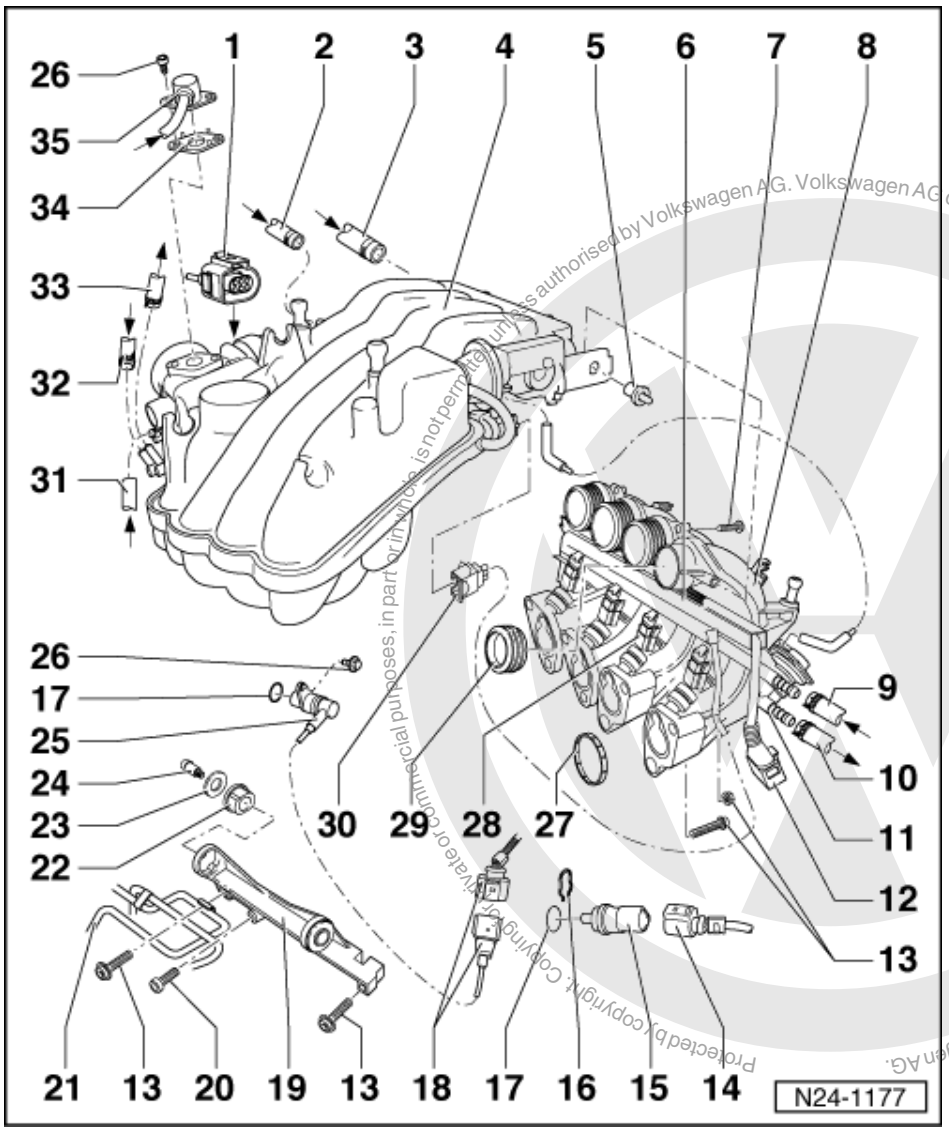

26 10 Nm

27 Seal

- Renew

28 Connector

- Black, 2-pin
- For injector (N30...N33)

29 Seal

If there are no stops on the intake manifold lower part:

- Bond seal to the intake manifold lower part with adhesive D 000 801 and hardener D 000 802
- Identification
  => Fig. 1
- Renew if damaged

30 Connector

- Black, 2-pin
- For twin path intake manifold change-over valve (N156)

Protected by copyright. Copying for private or commercial purposes, in part or in whole, is not permitted unless authorised by Volkswagen AG. Volkswagen AG does not guarantee or accept any liability with respect to the correctness of information in this document. Copyright by Volkswagen AG.
satelettronica

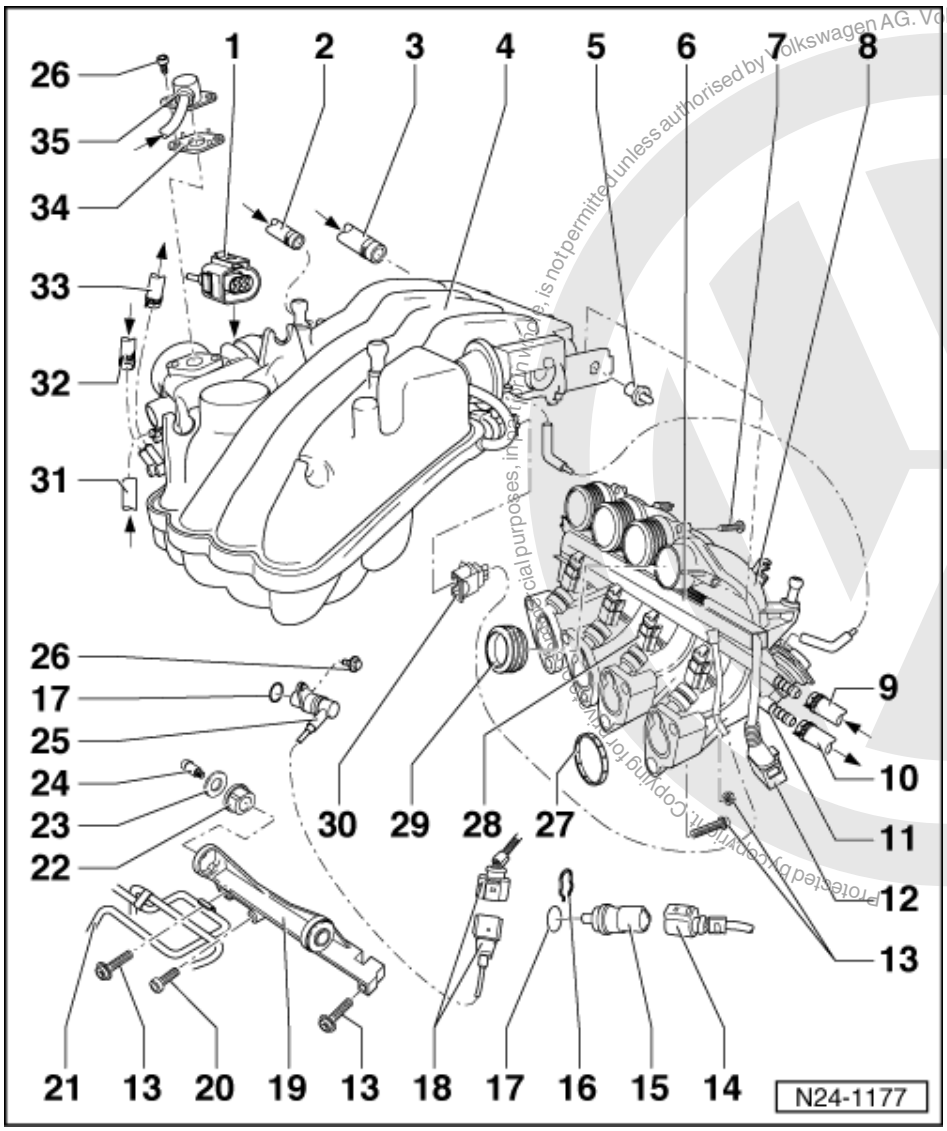

31 From activated charcoal filter solenoid valve (N80)

- Activated charcoal filter system

=> Repair group 20; Activated charcoal filter system; Servicing parts of the activated charcoal filter system
Activated charcoal filter system Servicing parts of the activated charcoal filter system

32 From heater supply

33 To T-piece and further to top of coolant expansion tank

34 Gasket

- Renew

35 Connection

- From connecting pipe
  => Item 21

Protected by copyright. Copying for private or commercial purposes, in any form or medium, is not permitted unless authorised by Volkswagen AG. Volkswagen AG does not guarantee or accept any liability with respect to the correctness of information in this document. Copyright by Volkswagen AG.
satelettronica

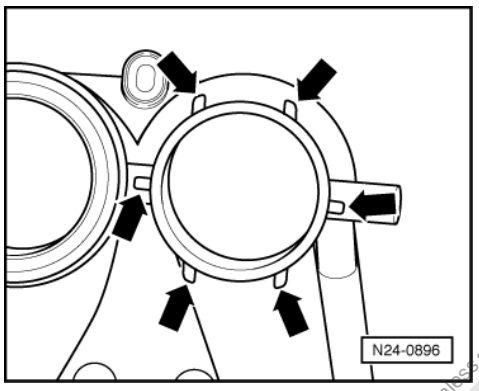

Fig.1 -> Identification: Stops for seal on intake manifold lower part -arrows-

If there are no stops on the intake manifold lower part the seals must be bonded to the intake manifold lower part with adhesive D 000 801 and hardener D 000 802.

1.5 - Dismantling and assembling intake manifold - Upper part

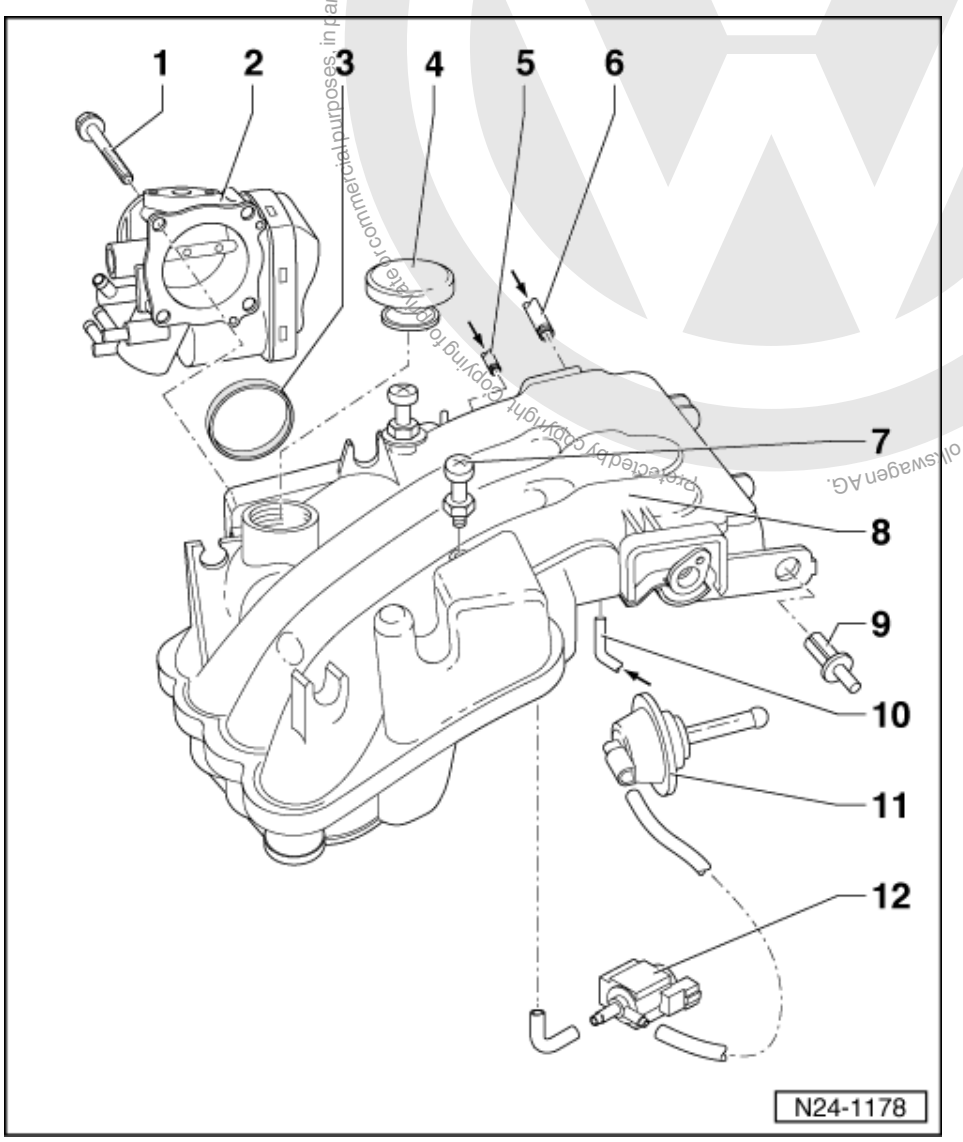

Protected by copyright. Copying for private or commercial purposes, in part or in whole, is not permitted unless authorised by Volkswagen AG. Volkswagen AG does not guarantee or accept any liability with respect to the correctness of information in this document. Copyright by Volkswagen AG.
satelettronica

1 8 Nm
- Take note that securing bolts are of differing lengths

2 Throttle valve control part (J338)*
- Without cable disc for accelerator cable as EPC is fitted
- 6-pin connector
- Connector contacts are gold-plated
- Heated by coolant
- Checking => Page 108
- If renewed, erase learnt values and adapt engine control unit to throttle valve control part=> Page 147

3 Seal
- Renew if damaged

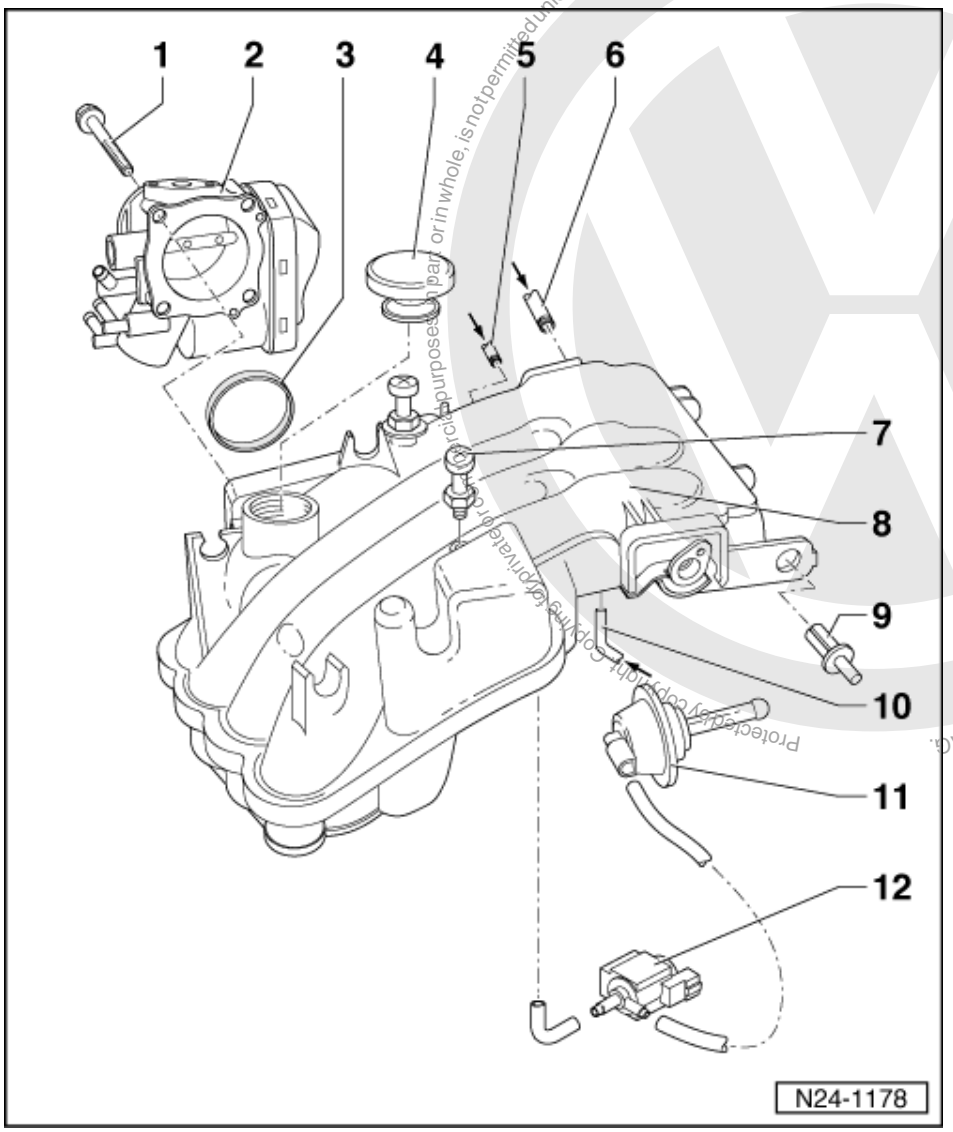

4 Pressure relief valve
- Protects the intake manifold from damage if pressure is too high

5 Vacuum hose
- From intake hose
  => Page 91 , item 2

6 From brake servo
- Secure with spring-type clips

7 Threaded mounting, 8 Nm

8 Intake manifold - upper part

9 Spreader rivet

Protected by copyright. Copying for private or commercial purposes, in part or in whole, is not permitted unless authorised by Volkswagen AG. Volkswagen AG does not guarantee or accept any liability with respect to the correctness of information in this document. Copyright by Volkswagen AG.
satelettronica

10 Vacuum hose

- From fuel pressure regulator
  => Page 90 , item 9

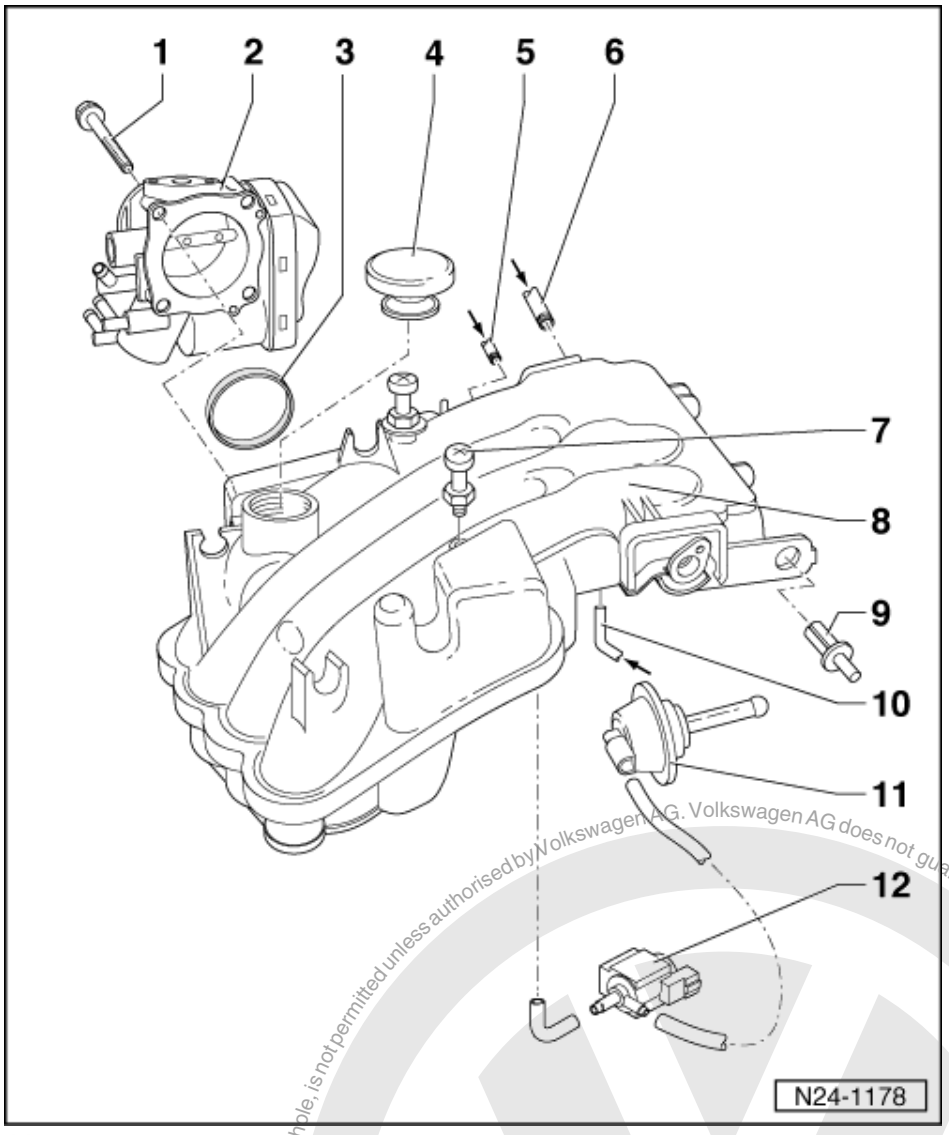

11 Vacuum control element

- Checking intake manifold change-over valve => Page 141

12 Intake manifold change-over valve (N156)*/**

- Checking intake manifold change-over valve => Page 141

Protected by copyright. Copyright by Volkswagen AG.
Copyright by Volkswagen AG. Volkswagen AG does not guarantee or accept any liability with respect to the correctness of information in this document.
Copying for private or commercial purposes, in part or in whole, is not permitted unless authorised by Volkswagen AG.
satelettronica

1.6 - Dismantling and assembling fuel rail with injectors

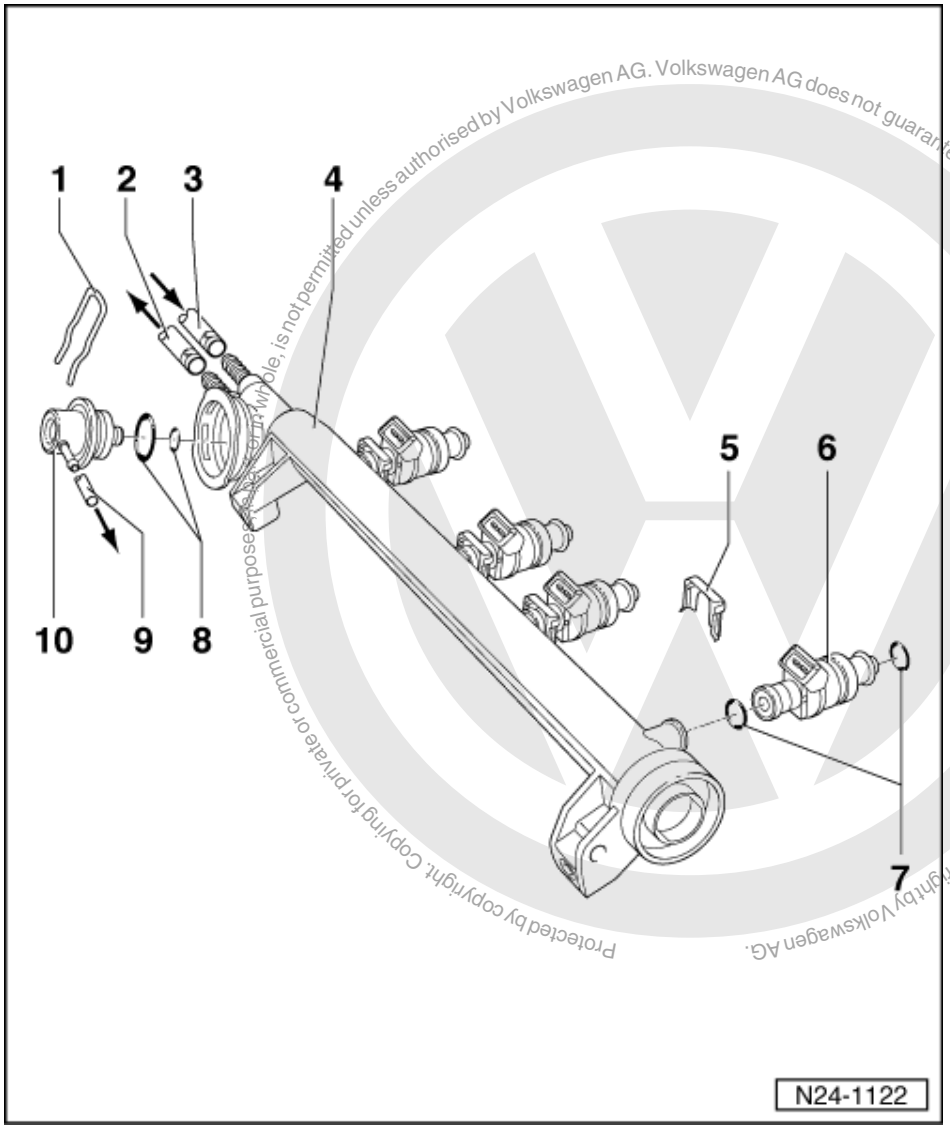

Protected by copyright. Copying for private or commercial purposes, in whole, is not permitted unless authorised by Volkswagen AG. Volkswagen AG does not guarantee or accept any liability with respect to the correctness of information in this document. Copyright by Volkswagen AG.

satelettronica

1 Retaining clip
- Check seated securely

2 Return pipe
- Blue or with blue marking
- Secure with spring-type clips
- Check securely seated
- To the fuel delivery unit in fuel tank

=> Repair Group 20; Removing and installing parts of fuel supply system; Removing and installing fuel tank with attachments and fuel filter Removing and installing parts of fuel supply system Removing and installing fuel tank with attachments and fuel filter

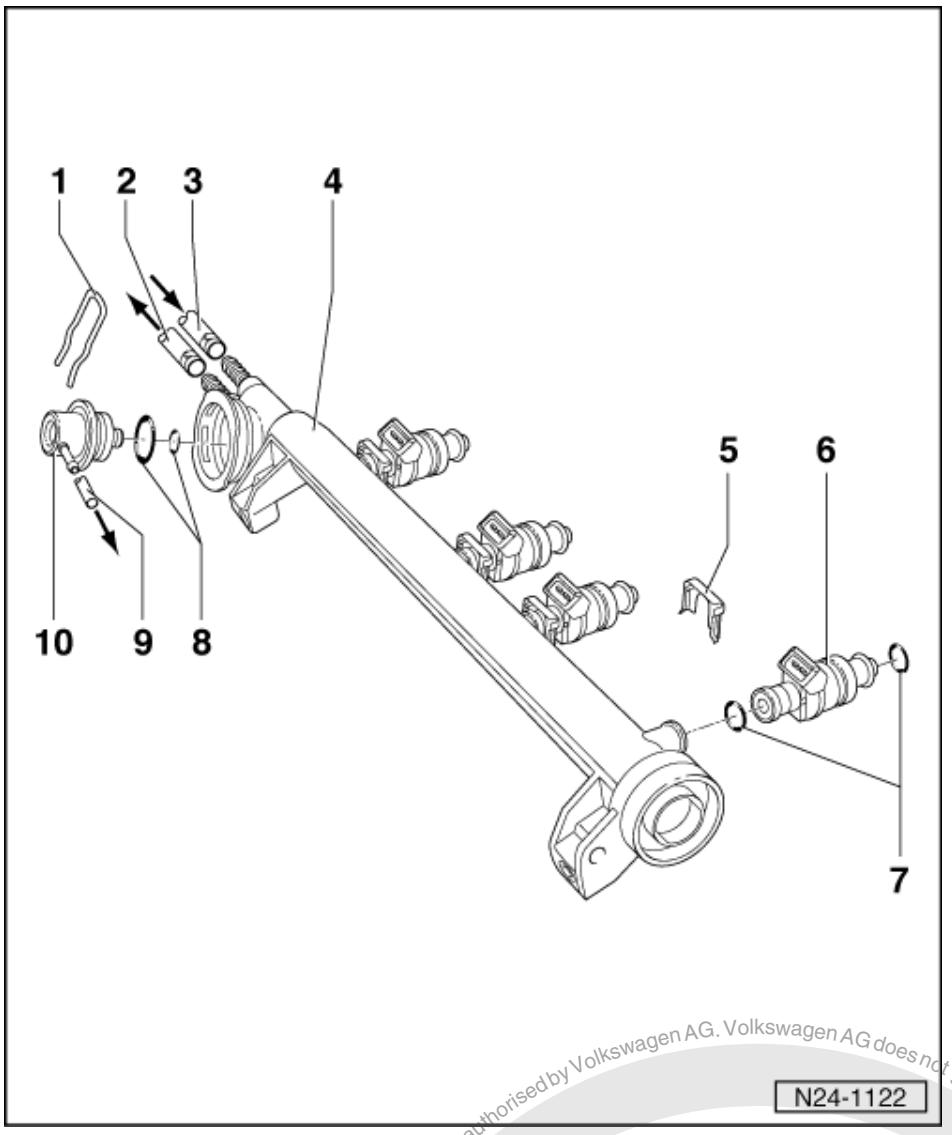

3 Supply pipe/hose
- Black with white marks
- Secure with spring-type clips
- Check securely seated
- From fuel filter:

=> Repair Group 20; Removing and installing parts of fuel supply system; Removing and installing fuel tank with attachments and fuel filter Removing and installing parts of fuel supply system Removing and installing fuel tank with attachments and fuel filter

4 Fuel rail

5 Retaining clip
- Ensure seated correctly at injector and fuel rail

6 Injectors (N30...N33)*
- Checking => Page 118
- Resistance 14.0...17.0 ω(at room temperature)
- If renewed, erase learnt values and adapt engine control unit to throttle valve control part=> Page 147

satelettronica
Protected by copyright. Copying for private or commercial purposes, in part or in whole, is not permitted unless authorised by Volkswagen AG. Volkswagen AG does not guarantee or accept any liability with respect to the correctness of information in this document. Copyright by Volkswagen AG.

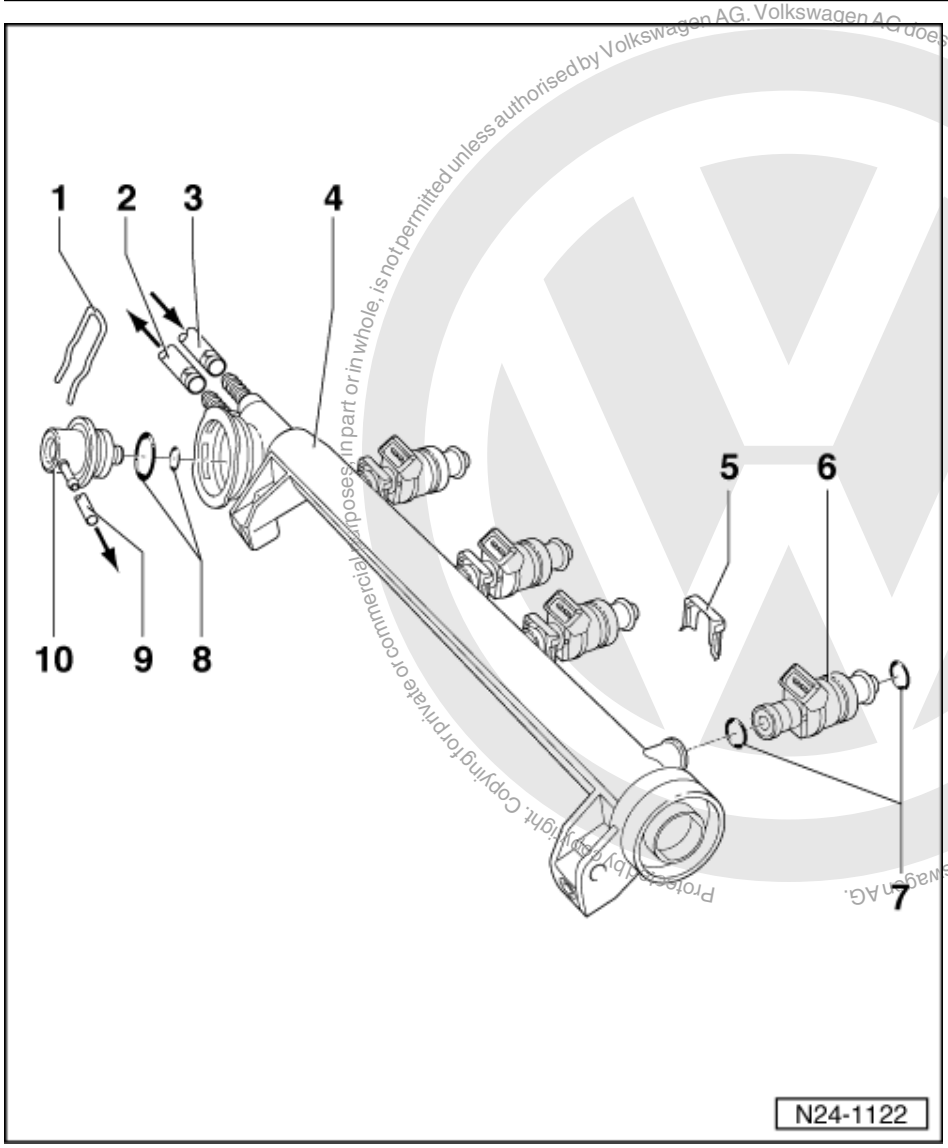

Protected by copyright. Copying for private or commercial purposes, in part or in whole, is not permitted unless authorised by Volkswagen AG. Volkswagen AG does not guarantee or accept any liability with respect to the correctness of information in this document. Copyright by Volkswagen AG.

satelettronica

7 O-ring
- Renew
- Before installing moisten with clean engine oil

8 O-ring
- Renew if damaged

9 Vacuum hose
- To intake manifold upper part =>
  => Page 87 , item 10

10 Fuel pressure regulator
- Checking => Page 125 , checking fuel pressure regulator and holding pressure

1.7 - Dismantling and assembling air cleaner

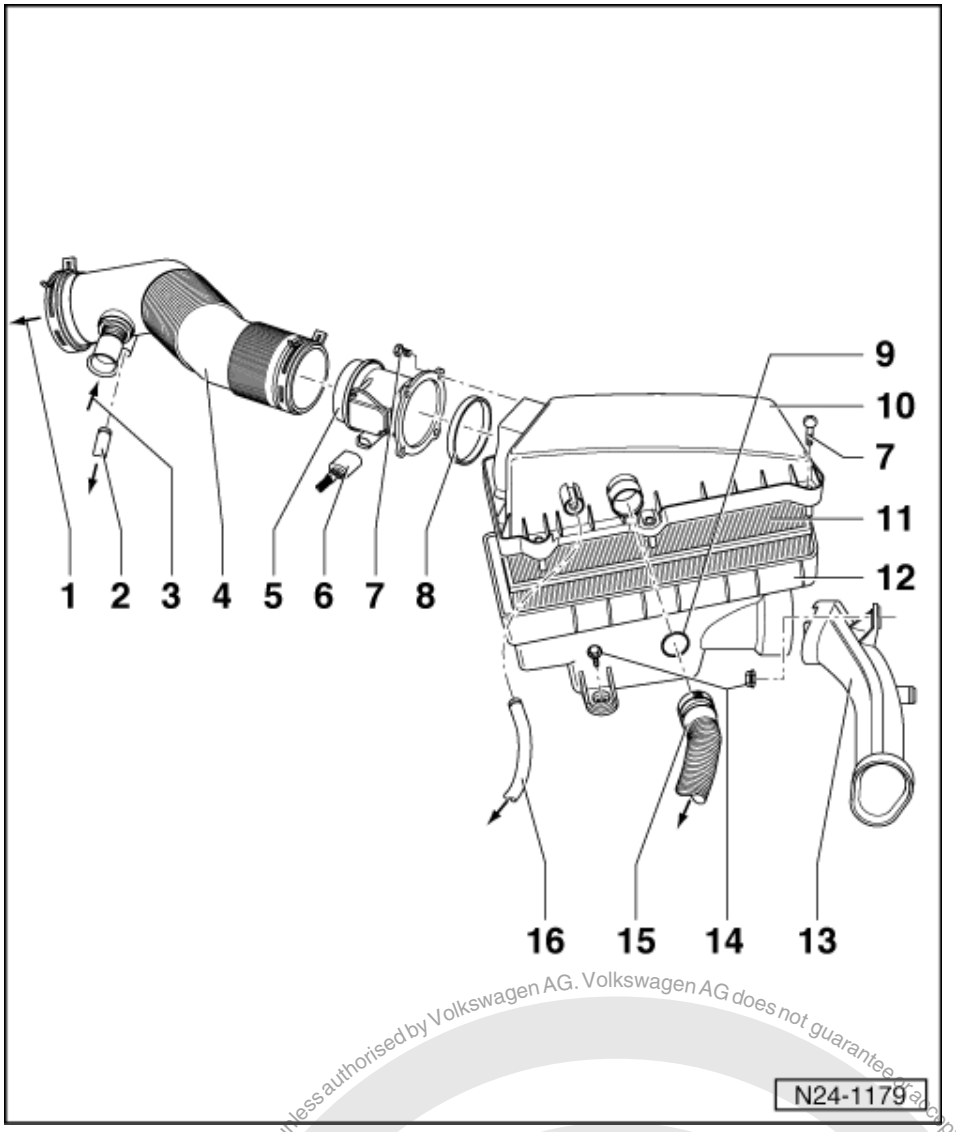

1 To throttle valve control part (J338)
2 Vacuum hose
- To intake manifold => => Page 86 , item 5

3 From breather housing on cylinder head cover
4 Intake hose
5 Air mass meter (G70)* with intake air temperature sender (G42)*
- Checking air mass meter => Page 102
- Checking intake air temperature sender => Page 104

Protected by copyright. Copying for private or commercial purposes, in any form and by any means, is not permitted unless authorised by Volkswagen AG. Volkswagen AG does not guarantee or accept any liability with respect to the correctness of information in this document. Copyright by Volkswagen AG.
satelettronica

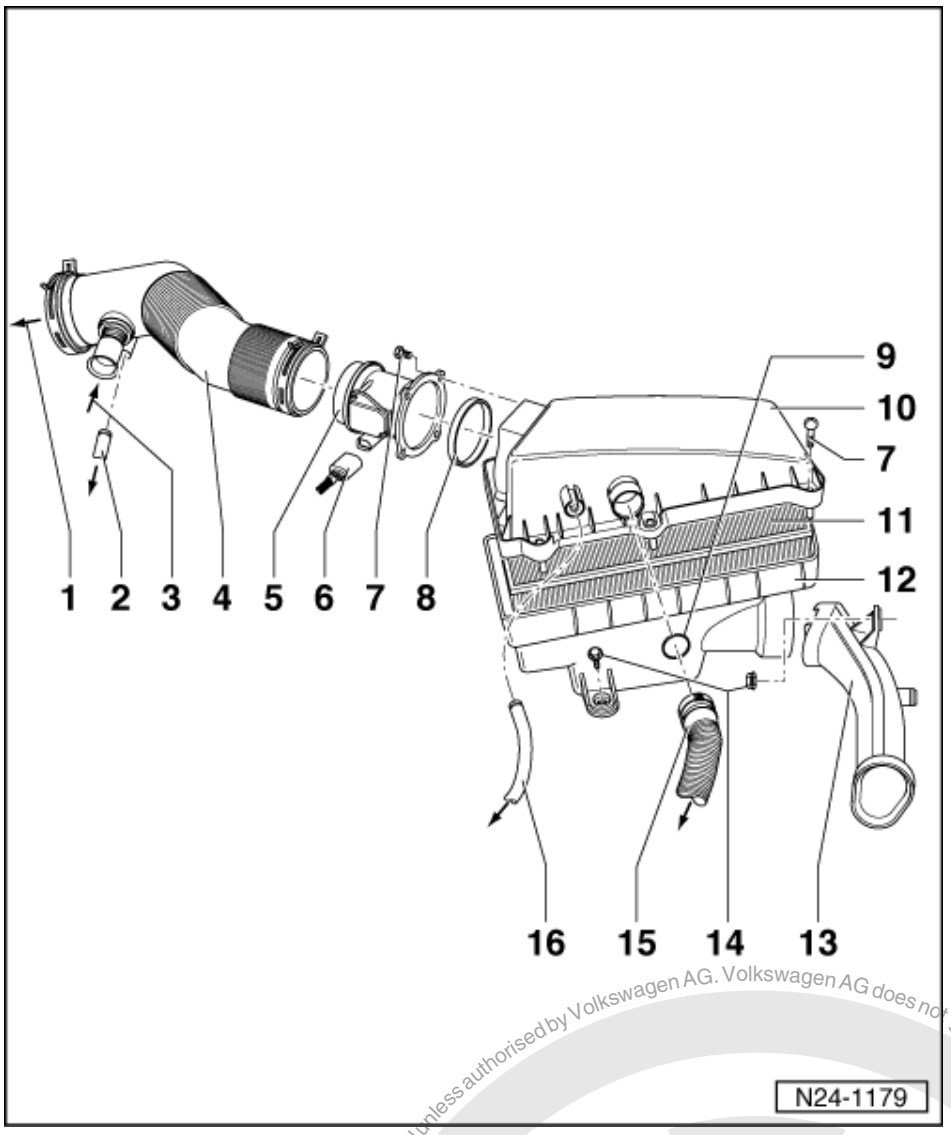

6 Connector
- Black, 4 pin
- Contacts gold plated

7 6 Nm

8 Seal
- Renew if damaged

9 O-ring
- Renew if damaged

10 Air cleaner upper part

11 Filter element

12 Air cleaner lower part

13 Air duct
- To lock carrier

14 10 Nm

Protected by copyright. Copying for private or commercial purposes, in part or in whole, is not permitted unless authorised by Volkswagen AG. Volkswagen AG does not guarantee or accept any liability with respect to the correctness of information in this document. Copyright by Volkswagen AG.
satelettronica

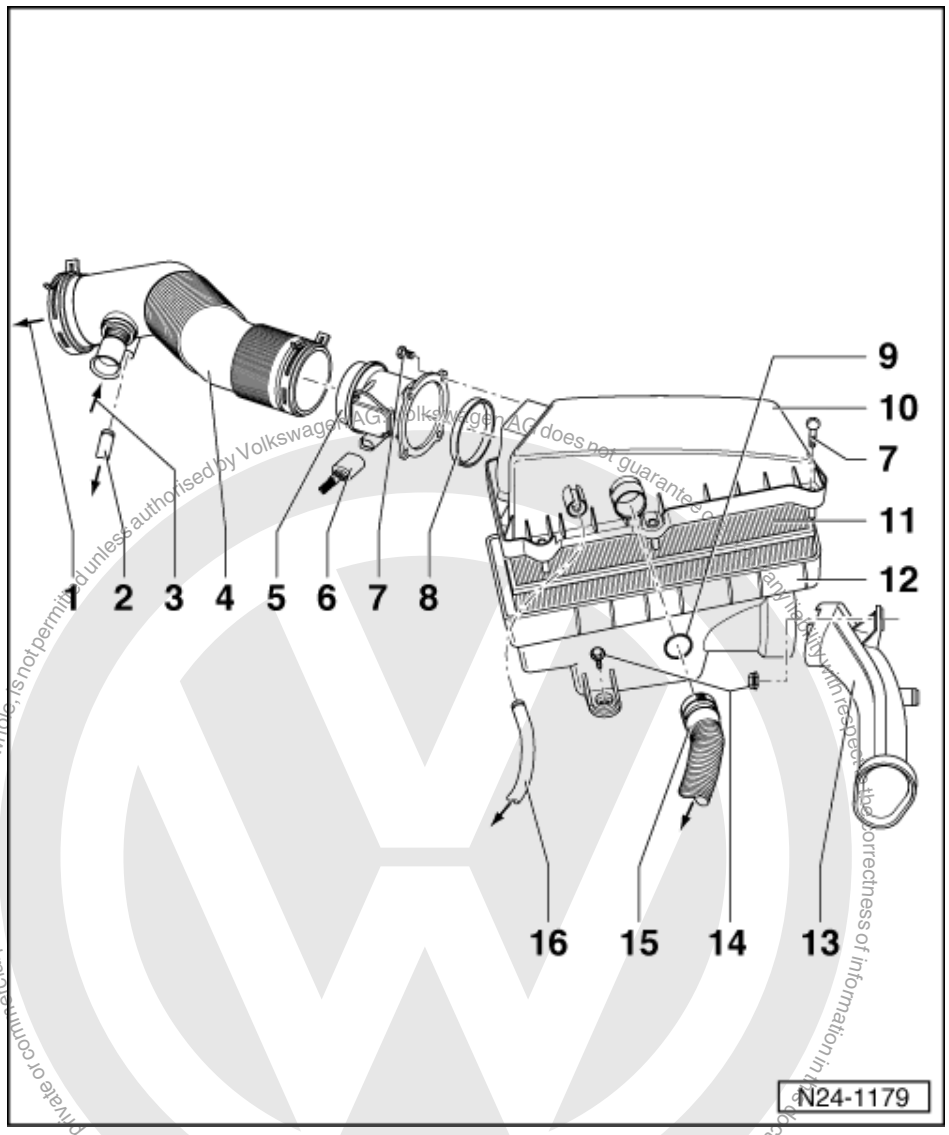

15 Intake hose

- To secondary air pump motor:

=> Repair group 26; Secondary air system; Removing and installing parts of secondary air system Secondary air system Removing and installing parts of secondary air system

16 Ventilation hose

- Clean air connection for ventilation
- To exhaust gas recirculation valve

=> Repair group 26; Exhaust gas recirculation system; Servicing parts of the exhaust gas recirculation system Exhaust gas recirculation system Servicing parts of the exhaust gas recirculation system

1.8 - Safety precautions

Warning!
Fuel system is under pressure! Before opening the system place a cloth around the connection. Then release pressure by carefully loosening the connection.

Protected by copyright. Copying for private or commercial purposes, in part or in whole, is not permitted unless authorised by Volkswagen AG. Volkswagen AG does not guarantee or accept any liability with respect to the correctness of information in this document. Copyright by Volkswagen AG.

satelettronica

To prevent injuries to persons and/or damage to the fuel injection and ignition system, the following must be noted:

- Do not touch or disconnect ignition wiring when the engine is running or being turned at starter speed.
- The ignition must be switched off before connecting or disconnecting injection or ignition system wiring or tester cables.

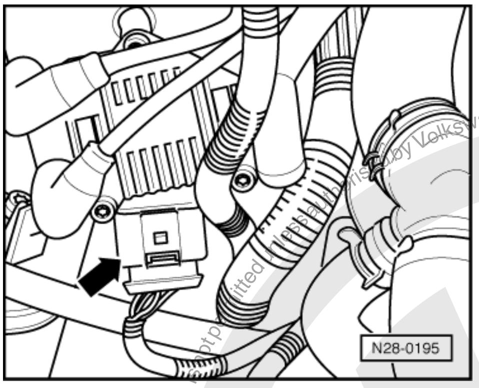

- If the engine is to be turned at starter speed, without starting:

- -> Pull 4 pin connector off ignition transformer (N152) -arrow-.

Observe following if test and measuring instruments are required during a test drive:

- Test and measuring instruments must be secured to rear seat and operated by a 2nd person from this location.

  If test and measuring instruments are operated from front passenger's seat and the vehicle is involved in an accident, there is a possibility that the person sitting in this seat may receive serious injuries when the airbag is triggered.

1.9 - Rules for cleanliness

When working on the fuel supply/injection system, pay careful attention to the following "5 rules":

- Thoroughly clean all unions and the adjacent areas before disconnecting.
- Place parts that have been removed on a clean surface and cover. Do not use fluffy cloths!
- Carefully cover opened components or seal, if the repair cannot be carried out immediately.
- Only install clean components:
  Only unpack replacement parts immediately prior to installation.
  Do not use parts that have been stored loose (e.g. in tool boxes etc.).
- When the system is open:
  Do not work with compressed air if this can be avoided.
  Do not move vehicle unless absolutely necessary.

1.10 - Technical data

Engine code		APF
Idling check		
Idling speed 1)	rpm	760...880 2)
Engine control unit 3)		
System designation		SIMOS 3.3
Part number 4)		6K0 906 033A

Protected by copyright. Copying for private or commercial purposes, in part or in whole, is not permitted unless authorised by Volkswagen AG. Volkswagen AG does not guarantee or accept any liability with respect to the correctness of information in this document. Copyright by Volkswagen AG.

satelettronica

Engine code		APF
Engine speed limitation	rpm	from approx. 6350

1) Not adjustable

2) Up-to-date specifications:

=> Exhaust emissions test binder

3) Replacing engine control unit => Page 143

4) For latest part number for engine control unit:

=> Parts microfiche

2 - Checking components

2.1 - Checking components

2.2 - Checking Lambda probe heating for Lambda probe before catalyst

Note:

Only gold-plated contacts must be used to repair the contacts in the Lambda probes connectors.

Special tools, workshop equipment, testers, measuring instruments and auxiliary items required

- Hand multimeter V.A.G 1526 or multimeter V.A.G 1715
- Fault reader V.A.G 1551 (or vehicle system tester V.A.G 1552) with cable V.A.G 1551/3
- Adapter set V.A.G 1594

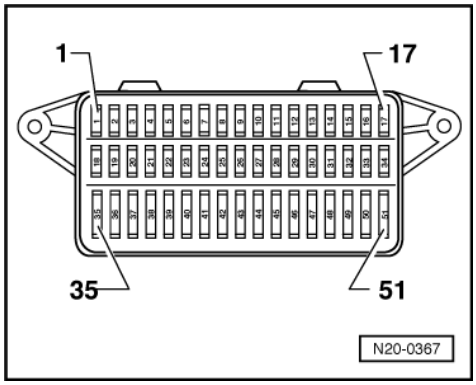

- Test box V.A.G 1598/31
- Current flow diagram

Test conditions

- -> The fuses 1, 31 and 36 must be OK.
- The battery voltage must be at least 11.5 V.
- Earth connection in plenum chamber OK.
- All electrical consumers, e.g. lights and rear window heating must be switched off.
- If the vehicle is equipped with an air conditioning system, this must be switched off.
- Fuel pump relay must be OK =>Page 25 , final control diagnosis.

Copyright by Volkswagen AG. Volkswagen AG does not guarantee or accept any liability with respect to the correctness of information in this document. Copyright by Volkswagen AG. Reproduced by copyright holder for private or commercial purposes, in part or in whole, is not permitted unless authorised by Volkswagen AG.
satelettronica

Test sequence

- Connect fault reader V.A.G 1551 (V.A.G 1552). Start engine and select "Address word" 01 of engine control unit. When doing this the engine must be running at idling speed.
  (Connecting fault reader and selecting engine control unit => Page 4 .)

-> Indicated on display:

```
Rapid data transfer     HELP
Select function XXX
```

- Press keys 0 and 8 for the function "Read measured value block" and confirm entry with Q key.

-> Indicated on display:

```
Read measured value block
Input display group number XXX
```

- Press keys 0, 4 and 1 for "Display group number 41" and confirm entry with Q key.

-> Indicated on display:
(1...4 = Display zones)

```
Read measured value block 41
     1     2     3     4
```

- Check the status of the Lambda probe heating in display zone 2:
  Display: Htg.bC.ON

If the specification is not obtained:

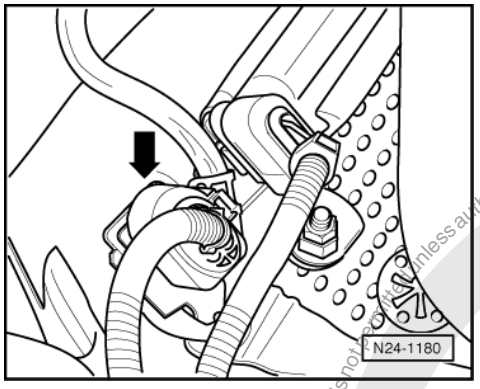

- Press ⇒key.
- Press keys 0 and 6 for the function "End output" and confirm entry with the Q key.
- Switch off ignition.
- -> Separate 6-pin connector (black) to Lambda probe before catalyst (G39) -arrow-.

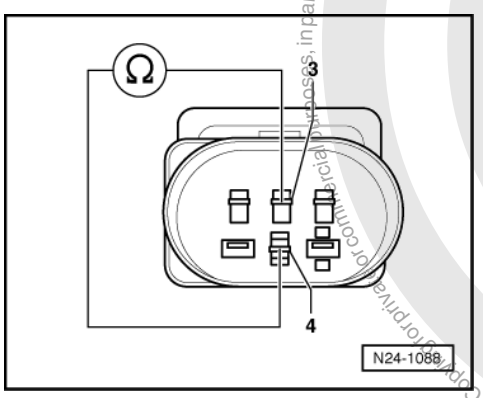

- -> Check resistance for probe heater at Lambda probe connector -1- contacts 3 and 4
  Specification: 2.5...10 ω(at room temperature).

Protected by copyright. Copying for private or commercial purposes, in part or in whole, is not permitted unless authorised by Volkswagen AG. Volkswagen AG does not guarantee or accept any liability with respect to the correctness of information in this document. Copyright by Volkswagen AG.
satelettronica

Note:

The heating element resistance is approx. 2.5...10.0 ω at room temperature. Even slight increases in room temperature increase the resistance greatly.

If the specification is not obtained:

- Renew Lambda probe before catalyst (G39)
  =>Page 71 , item 8 .
- Interrogate fault memory, if necessary, repair any faults and then erase fault memory => Page 10 , interrogating and erasing fault memory.

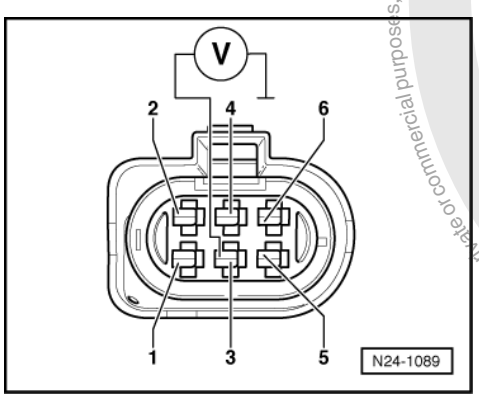

- Erase the learnt values and adapt the engine control unit again=> Page 147

If the specification is obtained:

- -> Set multimeter to measure voltage and connect to contact 3 (connector to engine control unit) and earth.
- Start engine and run at idling speed.
  Specification: 11.0...14.5 V

If the specification is not obtained:

- Switch off ignition.

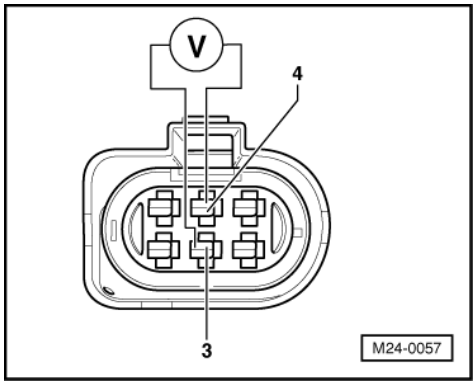

- Check wire for open circuit between 6-pin connector contact 3 and fuel pump relay (J17) using current flow diagram.
  Wire resistance: max. 1.5 ω

If the specification is obtained:

- -> To measure voltage, connect multimeter to contacts 3 + 4 (connector to engine control unit).
  Specification: 11.5...14.5 V
- Switch off ignition.

satelettronica

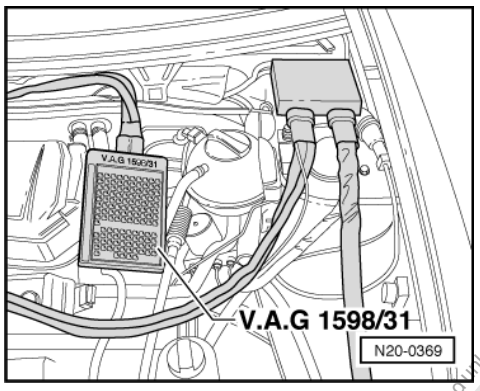

If the specification is not obtained:

- Remove left cover for plenum chamber.
- -> Connect test box V.A.G 1598/31 to control unit wiring harness. The engine control unit remains disconnected.

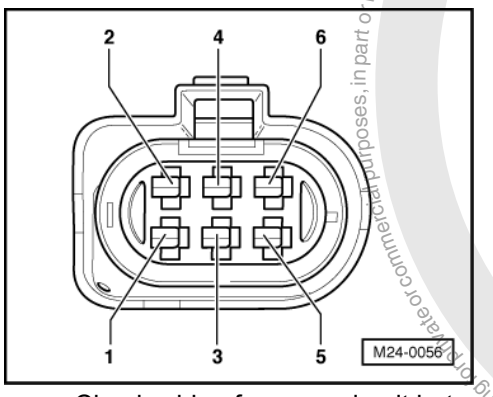

- -> Check wiring for open circuit between test box and 6-pin connector referring to current flow diagram:
  Contact 4 and test box socket 4
  Wire resistance: max. 1.5 ω
- Check wiring additionally for short to vehicle earth or battery positive.
  Specification: ∞ω

If the specification is obtained:

- Replace engine control unit
  => Page 145 .

2.3 - Checking Lambda probe heating for Lambda probe after catalyst

Special tools, workshop equipment, testers, measuring instruments and auxiliary items required

- Hand multimeter V.A.G 1526 or multimeter V.A.G 1715
- Fault reader V.A.G 1551 (or vehicle system tester V.A.G 1552) with cable V.A.G 1551/3
- Adapter set V.A.G 1594
- Test box V.A.G 1598/31
- Current flow diagram

Protected by copyright. Copying for private or commercial purposes, in part or in whole, is not permitted unless authorised by Volkswagen AG. Volkswagen AG does not guarantee or accept any liability with respect to the correctness of information in this document. Copyright by Volkswagen AG.
satelettronica

Test conditions

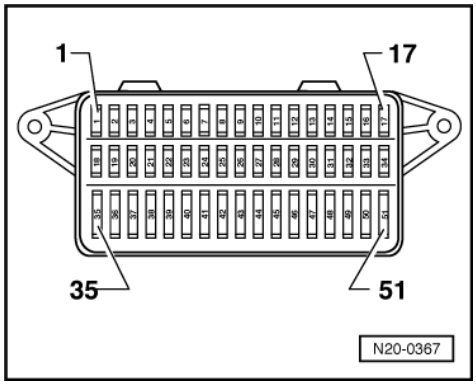

- -> The fuses 1, 31 and 36 must be OK.
- The battery voltage must be at least 11.5 V.
- Earth connection in plenum chamber OK.
- All electrical consumers, e.g. lights and rear window heating must be switched off.
- If the vehicle is equipped with an air conditioning system, this must be switched off.
- Fuel pump relay must be OK =>Page 25 , final control diagnosis.

Test sequence

- Connect fault reader V.A.G 1551 (V.A.G 1552). Start engine and select "Address word" 01 of engine control unit. When doing this the engine must be running at idling speed.
  (Connecting fault reader and selecting engine control unit => Page 4 .)

-> Indicated on display:

```
Rapid data transfer      HELP
Select function XXX
```

- Press keys 0 and 8 for the function "Read measured value block" and confirm entry with Q key.

-> Indicated on display:

```
Read measured value block
Input display group number XXX
```

- Press keys 0, 4 and 1 for "Display group number 41" and confirm entry with Q key.

-> Indicated on display:
(1...4 = Display zones)

```
Read measured value block 41
     1      2      3      4
```

- Check the status of the Lambda probe heating in display zone 4:
  Display: Htg.aC.ON

If the specification is not obtained:

- Press ⇒key.

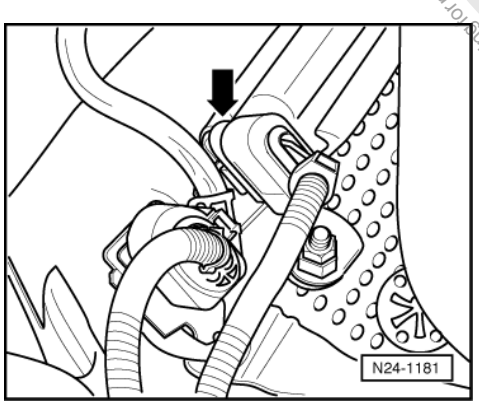

Copyright by Volkswagen AG. Volkswagen AG does not guarantee or accept any liability with respect to the correctness of information in this document. Copyright by Volkswagen AG. Protected by copyright. Copying for private or commercial purposes, in part or in whole, is not permitted unless authorised by Volkswagen AG.
satelettronica

- Press keys 0 and 6 for the function "End output" and confirm entry with the Q key.
- Switch off ignition.
- -> Separate 4-pin connector (black) to Lambda probe after catalyst (G130) -arrow-.

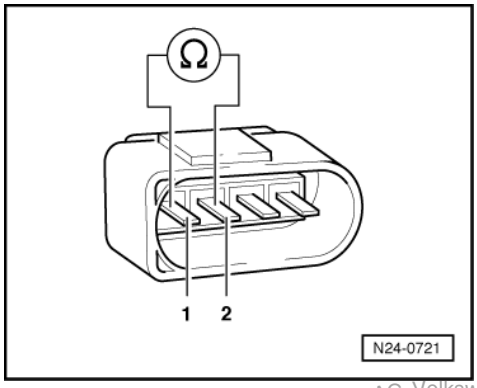

- -> Check resistance for probe heater at Lambda probe connector contacts 1 and 2.
  Specification: 6.4...47.5 ω (at room temperature).

If the specification is not obtained:

- Replace the Lambda probe after catalyst (G130) => Page 72 , item 9 .
- Interrogate fault memory, if necessary, repair any faults and then erase fault memory => Page 10 , interrogating and erasing fault memory.
- Erase the learnt values and adapt the engine control unit again=> Page 147 .

If the specification is obtained:

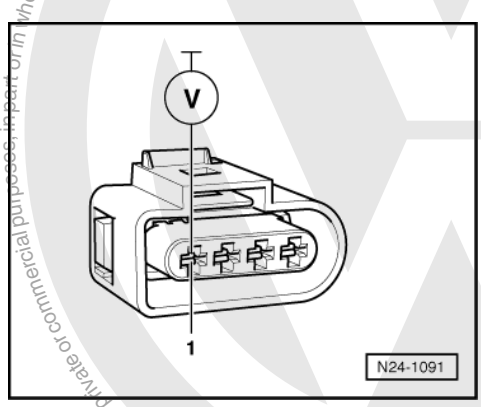

- -> Set multimeter to measure voltage and connect to contact 1 (connector to engine control unit) and earth.
- Start engine and run at idling speed.
  Specification: 11.0...14.5 V

If the specification is not obtained:

- Switch off ignition.
- Check wire for open circuit between 4-pin connector contact 1 and fuel pump relay (J17) referring to current flow diagram.
  Wire resistance: max. 1.5 ω

Protected by copyright. Copyright by Volkswagen AG.
Volkswagen AG, Volkswagen AG does not guarantee or accept any liability with respect to the correctness of information in this document. Copyright by Volkswagen AG.
This document is not to be delivered to any third party or made accessible without prior authorisation by Volkswagen AG. Volkswagen AG does not guarantee or accept any liability with respect to the correctness of information in this document. Copyright by Volkswagen AG.
Reproduction for private or commercial purposes, in part or in whole, is not permitted unless authorised by Volkswagen AG.
satelettronica

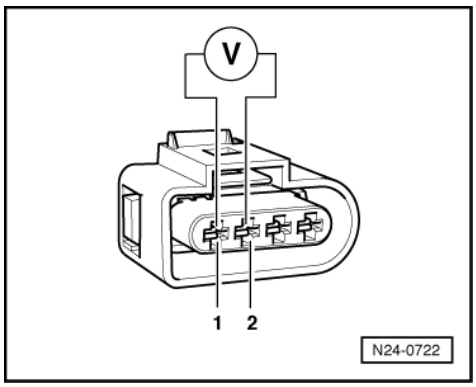

If the specification is obtained:

- -> Connect multimeter to measure voltage at contacts 1 + 2 (engine control unit connector).
  Specification 11.0...14.5 V
- Switch off ignition.

If the specification is not obtained:

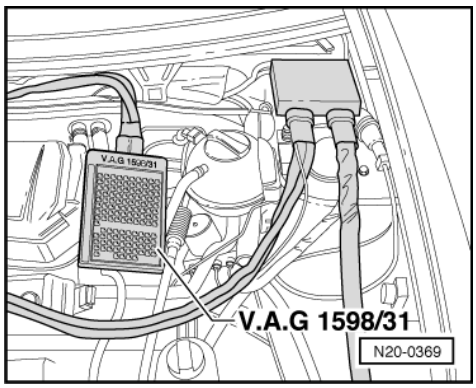

- Remove left cover for plenum chamber.
- -> Connect test box V.A.G 1598/31 to control unit wiring harness. The engine control unit remains disconnected.

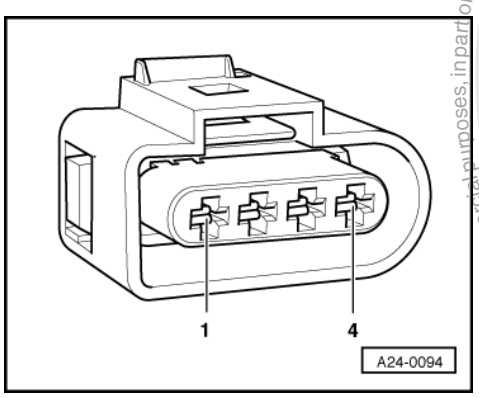

- -> Check wiring for open circuit between test box and 4-pin connector referring to current flow diagram:
  Contact 2 and test box socket 5
  Wire resistance: max. 1.5 ω
- Check wiring additionally for short to vehicle earth or battery positive.
  Specification: ∞ω

If the specification is obtained:

- Replace engine control unit

satelettronica
Protected by copyright. Copying for private or commercial purposes, in part or in whole is not permitted unless authorised by Volkswagen AG. Volkswagen AG does not guarantee or accept any liability with respect to the correctness of information in this document. Copyright by Volkswagen AG.

=> Page 145 .

2.4 - Checking air mass meter

Note:

Only gold-plated contacts may be used to repair the contacts in the air mass meter connector.

Special tools, workshop equipment, testers, measuring instruments and auxiliary items required

- Hand multimeter V.A.G 1526 or multimeter V.A.G 1715
- Fault reader V.A.G 1551 (or vehicle system tester V.A.G 1552) with cable V.A.G 1551/3
- Adapter set V.A.G 1594
- Test box V.A.G 1598/31

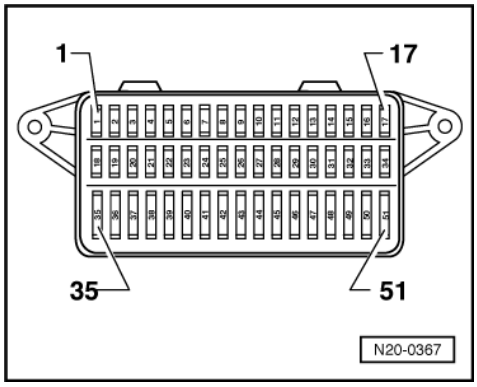

- Current flow diagram

Test conditions

- -> The fuses 1, 31 and 36 must be OK.
- The battery voltage must be at least 11.5 V.
- Earth connection in plenum chamber OK.
- All electrical consumers, e.g. lights and rear window heating must be switched off.
- If the vehicle is equipped with an air conditioning system, this must be switched off.
- Fuel pump relay must be OK =>Page 25 , final control diagnosis.
- Coolant temperature must be at least 80 °C, =>Display group 01, display zone 2.

Test sequence

- Connect fault reader V.A.G 1551 (V.A.G 1552). Start engine and select "Address word" 01 of engine control unit. When doing this the engine must be running at idling speed.
  (Connecting fault reader and selecting engine control unit => Page 4 .)

-> Indicated on display:

```
Rapid data transfer      HELP
Select function XXX
```

- Press keys 0 and 8 for the function "Read measured value block" and confirm entry with Q key.

-> Indicated on display:

```
Read measured value block
Input display group number XXX
```

- Press keys 0, 0 and 1 for "Display group number 1" and confirm entry with Q key.

-> Indicated on display:

Protected by copyright. Copying for private or commercial purposes, in part or in whole, is not permitted unless authorised by Volkswagen AG. Volkswagen AG does not guarantee or accept any liability with respect to the correctness of information in this document. Copyright by Volkswagen AG.
satelettronica

(1...4 = Display zones)

```
Read measured value block 1
     1     2     3     4
```

- Check whether the coolant temperature is above 80 °C in display zone 2.
- Change to display group 2 as follows:
  V.A.G 1551: Press key 3
  V.A.G 1552: Press key ↑

-> Indicated on display:
(1...4 = Display zones)

```
Read measured value block 2
     1     2     3     4
```

- Check the air mass drawn in in display zone 4
  Specification: 2.0...4.5 g/s
- Press ⇒key.

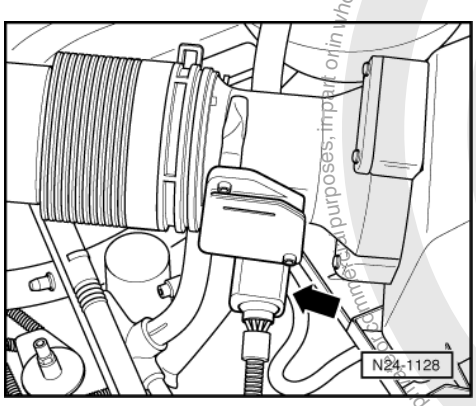

- Press keys 0 and 6 for the "End output" function and confirm input with the Q key.
- Switch off ignition.

If the specifications are not attained or there is a fault relating to the air mass meter in fault memory:

- -> Pull 4-pin connector off air mass meter (G70) -arrow-.

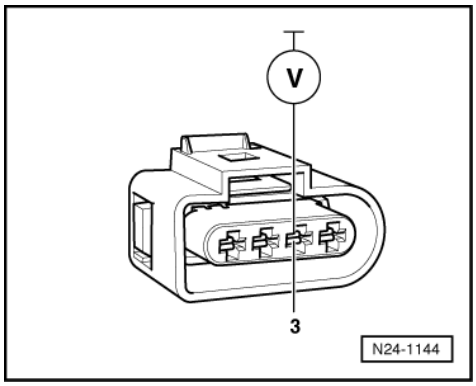

- -> Connect multimeter to measure voltage at contact 3 (engine control unit connector) + earth.
- Start engine and run at idling speed.
  Specification: 11.0...14.5 V
- Switch off ignition.
- If the voltage supply is OK, test the signal wire and earth wire => Page 104 .

If no voltage is present:

- Check wire for open circuit between contact 3 of 4-pin connector and fuel pump relay (J17) using current flow diagram.

Reproduced by copyright. Copyright by Volkswagen AG. Copying and publication of this document is not permitted unless authorised by Volkswagen AG. Volkswagen AG does not guarantee or accept any liability with respect to the correctness of information in this document.
satelettronica

Wire resistance: max. 1.5 ω

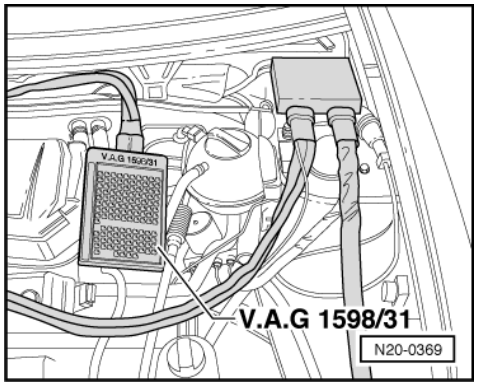

Testing signal wiring for air mass meter

- Remove left cover for plenum chamber.
- -> Connect test box V.A.G 1598/31 to control unit wiring harness. The engine control unit remains disconnected.

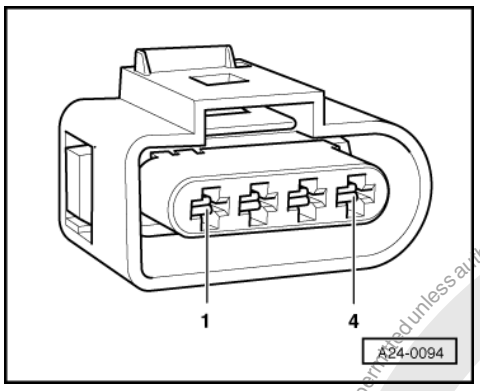

- -> Check wiring between test box and 4-pin connector for open circuit using current flow diagram:
  Contact 1 and test box socket 10
  Contact 1 and test box socket 11
  Wire resistance: max. 1.5 ω
- Additionally check wires for short to one another, to vehicle earth and to battery positive.
  Specification: ∞ω

If no fault is detected in the wiring:

- Renew air mass meter (G70) with intake air temperature sender (G42) =>Page 91 , item 5 .
- Interrogate fault memory, if necessary, repair any faults and then erase fault memory => Page 10 , interrogating and erasing fault memory.

2.5 - Checking intake air temperature sender

Note:

Only gold-plated contacts may be used to repair the contacts in the air mass meter connector.

Special tools, workshop equipment, testers, measuring instruments and auxiliary items required

- Hand multimeter V.A.G 1526 or multimeter V.A.G 1715
- Fault reader V.A.G 1551 (or vehicle system tester V.A.G 1552) with cable V.A.G 1551/3

Protected by copyright. Copying for private or commercial purposes, in part or in whole, is not permitted unless authorised by Volkswagen AG. Volkswagen AG does not guarantee or accept any liability with respect to the correctness of information in this document. Copyright by Volkswagen AG.
satelettronica

- Adapter set V.A.G 1594

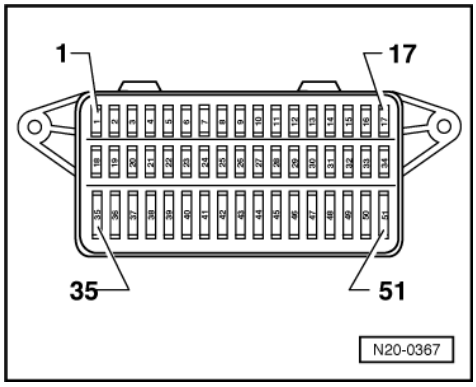

- Test box V.A.G 1598/31
- Chilling spray (commercially available)
- Current flow diagram

Test conditions

- -> Fuses 13 and 36 must be OK.
- Earth connection in plenum chamber OK.

Test sequence

- Connect fault reader V.A.G 1551 (V.A.G 1552). Start engine and select "Address word" 01 of engine control unit.
  (Connecting fault reader and selecting engine control unit => Page 4 .)

-> Indicated on display:

```
Rapid data transfer      HELP
Select function XXX
```

- Press keys 0 and 8 for the function "Read measured value block" and confirm entry with Q key.

-> Indicated on display:

```
Read measured value block
Input display group number XXX
```

- Press keys 0, 0 and 4 for "Display group number 4" and confirm entry with Q key.

-> Indicated on display:
(1...4 = Display zones)

```
Read measured value block 4
     1     2     3     4
```

- Observe intake air temperature in display zone 4 for at least 60 seconds:
  Specification: approx. ambient temperature

If the specification is not obtained:

- Perform check according to following table:

Appears on display	Possible fault cause	Fault elimination

Protected by copyright. Copying for private or commercial purposes, in part or in whole, is not permitted unless authorised by Volkswagen AG. Volkswagen AG does not guarantee or accept any liability with respect to the correctness of information in this document. Copyright by Volkswagen AG.
satelettronica

Above ambient temperature1)	---	Only if a sporadic fault was recognised: Continuation if display is about ambient temperature => Page 106
Constant 9.0 °C or 30.0 °C	- Open circuit or short to positive or earth - Air intake temperature sender defective (G42)	- Continue test if constant 9.0 °C or 30.0 °C is displayed => Page 106

1) If a temperature is displayed which deviates substantially from the ambient temperature, first check sender wiring for transfer resistance, keeping in mind that the sender may be warmed by heat radiated while vehicle is stationary.

2) If the engine control unit recognises a fault from G42, depending on whether the coolant temperature is below or above 70 °C, a delayed constant 9 °C or 30 °C is displayed. For an open circuit (∞ω)e.g.-42.5°C is displayed initially. After approx. 60 seconds, display changes to 9 °C or 30 °C.

Continuation of check when display = ambient temperature:

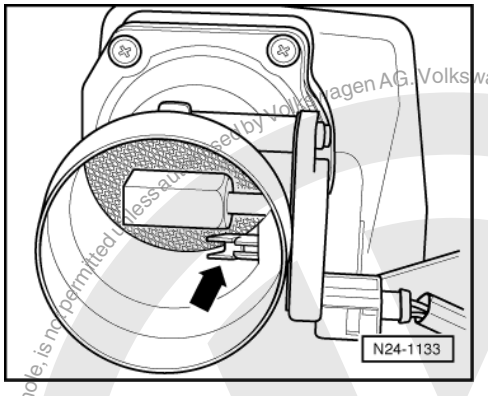

Functional check of sender

Remove the intake hose between air mass meter and throttle valve control part.
Note intake air temperature value in display zone 4.
-> Spray sender -arrow- with commercial chilling agent whilst observing the temperature value. The temperature value must
decrease.
- Press ⇒key.
- Press keys 0 and 6 for the function "End output" and confirm entry with the Q key.
- Switch off ignition.

If the specification is not obtained:

- Renew air mass meter (G70) with intake air temperature sender (G42) =>Page 91 , item 5 .
- Interrogate fault memory, if necessary, repair any faults and then erase fault memory => Page 10 , interrogating and erasing fault memory.

Continuation of test if constant 9.0°C or 30.0°C is displayed:

- Press ⇒key.
- Press keys 0 and 6 for the function "End output" and confirm entry with the Q key.
- Switch off ignition.

Protected by copyright. Copyright by Volkswagen AG. Volkswagen AG does not guarantee or accept any liability with respect to the correctness of information in this document. Copying for private or commercial purposes, in part or in whole, is not permitted unless authorised by Volkswagen AG.
satelettronica

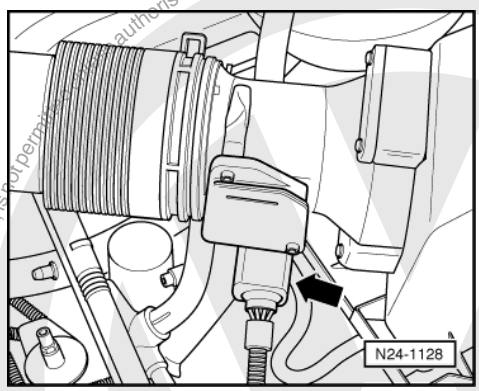

- -> Pull 4-pin connector off air mass meter (G70) -arrow-.

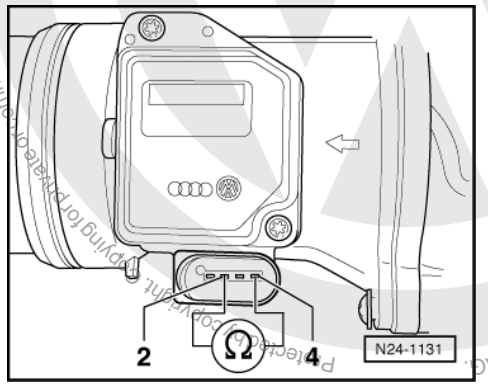

- -> Check resistance from intake air temperature sender between contacts 2 + 4.

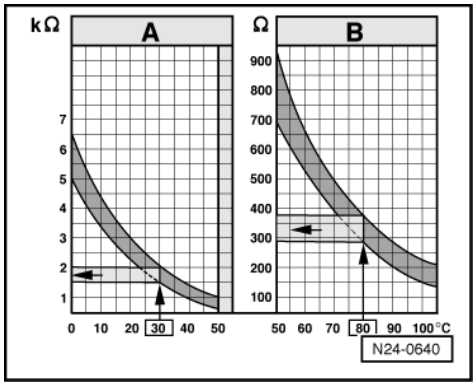

-> Specification see diagram

The diagram is divided into two temperature ranges:

A - From 0...50 °C
B - From 50...105 °C

Examples:

- 30 °C is in range A and corresponds to a resistance of 1.5...2.0 kω
- 80 °C is in range B and corresponds to a resistance of 275...375 ω

If the specification is not obtained:

- Renew air mass meter (G70) with intake air temperature sender (G42) =>Page 91 , item 5 .
- Interrogate fault memory, if necessary, repair any faults and then erase fault memory => Page 10 , interrogating and erasing fault memory.

Copyright by Volkswagen AG. Volkswagen AG does not guarantee or accept any liability with respect to the correctness of information in this document. Copying for private or commercial purposes, in part or in whole, is not permitted unless authorised by Volkswagen AG.
satelettronica

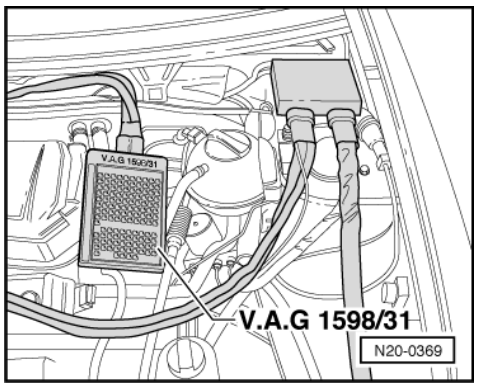

If the specification is obtained:

- Remove left cover for plenum chamber.
- -> Connect test box V.A.G 1598/31 to control unit wiring harness. The engine control unit remains disconnected.

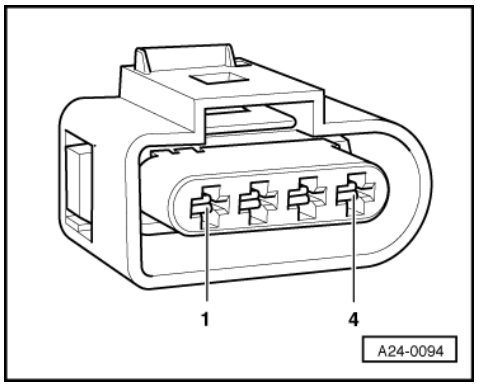

- Check wiring between test box and 4-pin connector for open circuit using current flow diagram.
  Contact 2 and test box socket 11
  Contact 4 and test box socket 44
  Wire resistance: max. 1.5 ω
- Additionally check wires for short to one another, to vehicle earth and to battery positive.
  Specification: ∞ω

If there is no fault in the wiring and the resistance measurement values are OK.:

- Replace engine control unit
  => Page 145 .

2.6 - Checking throttle valve control part

Components of throttle valve control part (J338):
Throttle valve drive (G186), angle sender 1 for throttle valve drive (G187) and angle sender 2 for throttle valve drive (G188).

Notes:

- Only gold-plated contacts may be used when servicing the throttle valve control part connector contacts.

If the throttle valve control part is replaced, the following must be carried out:

- Erase learnt values and adapt engine control unit to the throttle valve control part => Page 147 .

Copyright by Volkswagen AG. Volkswagen AG does not guarantee or accept any liability with respect to the correctness of information in this document. Copying for private or commercial purposes, in part or in whole, is not permitted unless authorised by Volkswagen AG.
satelettronica

Special tools, workshop equipment, testers, measuring instruments and auxiliary items required

- Hand multimeter V.A.G 1526 or multimeter V.A.G 1715
- Fault reader V.A.G 1551 (or vehicle system tester V.A.G 1552) with cable V.A.G 1551/3
- Adapter set V.A.G 1594
- Test box V.A.G 1598/31
- Current flow diagram
- Mirror

Check conditions

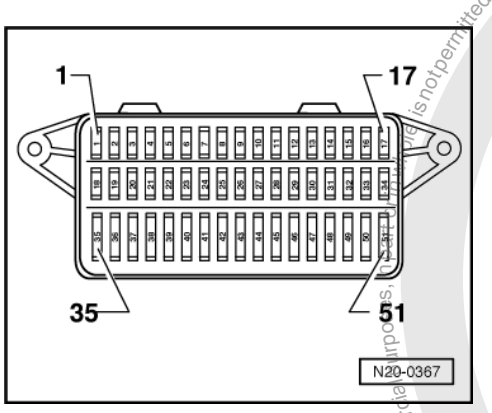

- -> Fuses 13 and 36 must be OK.
- The battery voltage must be at least 11.5 V.
- Earth connection in plenum chamber OK.
- All electrical consumers, e.g. lights and rear window heating must be switched off.
- If the vehicle is equipped with an air conditioning system, this must be switched off.
- The throttle valve control part must not be damaged or dirty (carbonization).
- Coolant temperature must be at least 80 °C, =>Display group 01, display zone 2.

Test sequence

- Connect the fault reader V.A.G 1551 (V.A.G 1552). Then switch ignition on and select engine control unit with the "Address word" 01.
  (Connecting fault reader and selecting engine control unit => Page 4 .)

-> Indicated on display:

```
Rapid data transfer     HELP
Select function XXX
```

- Press keys 0 and 8 for the function "Read measured value block" and confirm entry with Q key.

-> Indicated on display:

```
Read measured value block
Input display group number XXX
```

- Press keys 0, 0 and 1 for "Display group number 1" and confirm entry with Q key.

-> Indicated on display:
(1...4 = Display zones)

```
Read measured value block 1
     1     2     3     4
```

- Check whether the coolant temperature is above 80 °C in display zone 2.
- Change to display group 62 as follows:
- Press C key.

-> Indicated on display:

```
Read measured value block
Input display group number XXX
```

satelettronica

- Press keys 0, 6 and 2 for the "Display group number 62" and confirm entry with Q key.

-> Indicated on display:
(1...4 = Display zones)

```
Read measured value block 62
     1     2     3     4
```

- Check throttle valve angle sender 1 (G187) at idling speed limit stop in display zone 1
  Specification: 0.0...100.0 %
- Check throttle valve angle sender 2 (G188) at idling speed limit stop in display zone 2
  Specification: 100.0...0.0 %
- Depress accelerator slowly to full throttle position and observe angles displayed in display zones 1 and 2:

  The percentage in display zone 1 must rise
  evenly.
  The tolerance range 0.0...100.0 % is never used completely.
  The percentage in display zone 2 must fall
  evenly.
  The tolerance range 100.0...0.0 % is never used completely.

Notes:

- The reason why the display in display zone 1 increases and the display in display zone 2 decreases is because the potentiometers (angle senders) in the throttle valve control part run in opposite directions.
- This means that the voltage of one angle sender moves towards 5 volts. (The more the throttle valve is opened the higher the voltage; percentage figure increases).

- Whilst the voltage of angle sender 2 decreases from 5 volts towards 0 volts. (The more the throttle valve is opened the lower the voltage; percentage figure decreases).

- Press ⇒key.
- Press keys 0 and 6 for the function "End output" and confirm entry with the Q key.
- Switch off ignition.

If the displays do not indicate as described:

- Remove the intake hose between air mass meter and throttle valve control part.

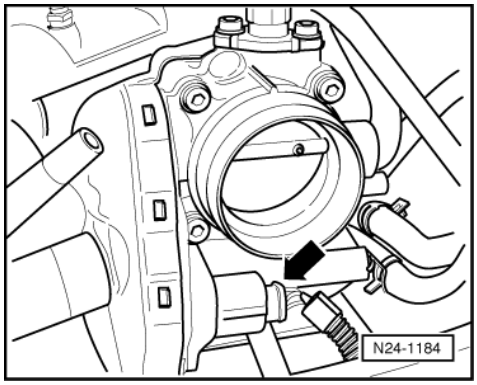

- -> Pull 6-pin connector off throttle valve control part -arrow-.

Protected by copyright. Copying for private or commercial purposes, in part or in whole, is not permitted unless authorised by Volkswagen AG. Volkswagen AG does not guarantee or accept any liability with respect to the correctness of information in this document. Copyright by Volkswagen AG.

satelettronica

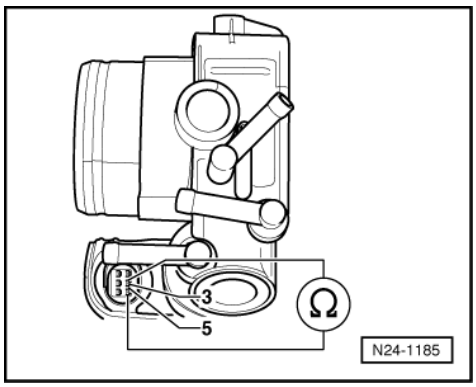

- Measure the throttle valve drive resistance on the throttle valve control unit between contacts 3 + 5.
  Specification: 3.0...200.0 ω (at room temperature)

If the specification is not obtained:

- Replace throttle valve control part (J338)
  =>Page 86 , item 2 .
- Interrogate fault memory, if necessary, repair any faults and then erase fault memory => Page 10 , interrogating and erasing fault memory.
- Erase the learnt values and adapt the engine control unit again=> Page 147 .

If the specification is obtained:

- Check voltage supply of throttle valve control part and wiring to control unit => Page 111 .
- Check the accelerator pedal position sender.

=> Repair group 20; Electronic engine output regulation (electronic accelerator (EPC)); Checking accelerator pedal position sender Electronic engine output regulation (electronic accelerator (EPC)) Checking accelerator pedal position sender

If the voltage supply and wiring is OK:

- Replace engine control unit
  => Page 145 .

Checking voltage supply and wiring to control unit

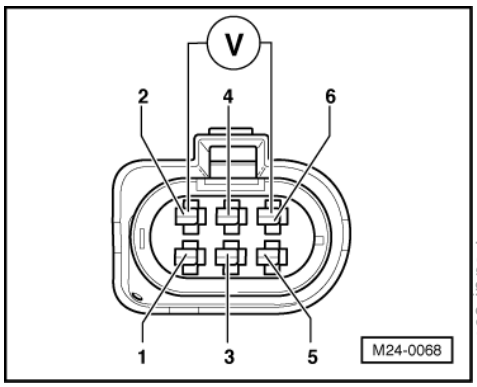

- -> Connect multimeter to measure voltage at connector contacts 2 (positive) + 6 (earth).
- Switch on ignition.
  Specification: min. 4.5 V
- Switch off ignition.

Protected by copyright. Copying for private or commercial purposes, in part or in whole, is not permitted unless authorised by Volkswagen AG. Volkswagen AG does not guarantee or accept any liability with respect to the correctness of information in this document. Copyright by Volkswagen AG.
satelettronica

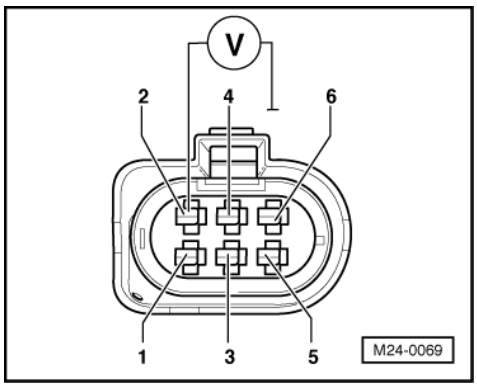

- -> Connect multimeter to measure voltage at connector contact 2 (positive) and earth.
- Switch on ignition.
  Specification: min. 4.5 V
- Switch off ignition.

If the specifications are not attained:

- Remove left cover for plenum chamber.

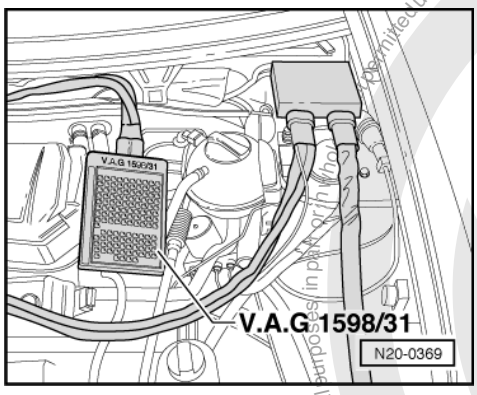

- -> Connect test box V.A.G 1598/31 to control unit wiring harness. The engine control unit remains disconnected.

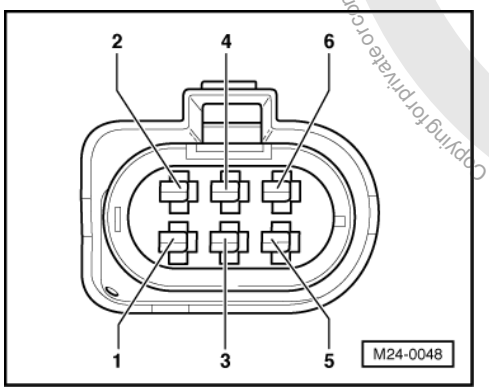

- -> Check wiring for open circuit between test box and connector referring to current flow diagram:
  Contact 1 and test box socket 90
  Contact 2 and test box socket 97
  Contact 3 and test box socket119
  Contact 4 and test box socket 92
  Contact 5 and test box socket121
  Contact 6 and test box socket 91
  Wire resistance: max. 1.5 ω
- Additionally check wires for short to one another, to vehicle earth and to battery positive.
  Specification: ∞ω

Protected by copyright. Copying for private or commercial purposes, in part or in whole, is not permitted unless authorised by Volkswagen AG. Volkswagen AG does not guarantee or accept any liability with respect to the correctness of information in this document. Copyright by Volkswagen AG.
satelettronica

If no fault is detected in the wiring:

- Check engine control unit voltage supply => Page 143 .

2.7 - Checking coolant temperature sender

Special tools, workshop equipment, testers, measuring instruments and auxiliary items required

- Hand multimeter V.A.G 1526 or multimeter V.A.G 1715
- Fault reader V.A.G 1551 (or vehicle system tester V.A.G 1552) with cable V.A.G 1551/3
- Adapter set V.A.G 1594
- Test box V.A.G 1598/31
- Current flow diagram

Test conditions

- Engine must be cold.

Test sequence

- Connect the fault reader V.A.G 1551 (V.A.G 1552). Then switch ignition on and select engine control unit with the "Address word" 01.
  (Connecting fault reader and selecting engine control unit => Page 4 .)

-> Indicated on display:

```
Rapid data transfer      HELP
Select function XXX
```

- Press keys 0 and 8 for the function "Read measured value block" and confirm entry with Q key.

-> Indicated on display:

```
Read measured value block
Input display group number XXX
```

- Press keys 0, 0 and 4 for "Display group number 4" and confirm entry with Q key.

-> Indicated on display:
(1...4 = Display zones)

```
Read measured value block 4
     1     2     3     4
```

- Read off coolant temperature value in display zone 3.
  Specification: approx. coolant temperature

If the specification is not obtained:

- Perform check according to following table:

Appears on display	Possible fault cause	Fault elimination
Approx. coolant temperature1)	---	Only when a sporadic fault is detected: When display is coolant temperature, continue with checks => Page 114 2)

Protected by copyright. Copyright by Volkswagen AG. Volkswagen AG does not guarantee or accept any liability with respect to the correctness of information in this document. Copyright by Volkswagen AG. Reproduction in part or in whole is not permitted unless authorised by Volkswagen AG.
satelettronica

Constant 49.5°C or 99.0° C3)	- Wiring open circuit or short to positive or earth - Coolant temperature sender (G62) defective	- Continue test if constant 49.5°C or 99.0° C is displayed => Page 114

1) When a temperature is displayed which deviates greatly from coolant temperature, first check sender wiring for transfer resistance.

2) Check only possible when engine is cold.

3) If the engine control unit recognises a fault in the coolant temperature sender (G62), two fixed replacement values (49.5° C or 99.0° C) are displayed "with ignition on", independent of air intake temperature (less than or above approx. 20° C). A model sequence stored in the control unit is then used to start (continual increase in temperature at set intervals). The temperature in the fault reader display increases therefore even though the connector from G62 is pulled off.

Continuation of check when display = coolant temperature:

Test conditions

- Engine must be cold.

Functional check of sender

- Start engine and run at idling speed.

```
Read measured value block 4
     1      2      3      4
```

-> Observe coolant temperature value in display zone 3 whilst engine is running. The temperature value must
increase steadily.

Notes:

- If the display on fault reader increases in steps of 1.5 °C, this is control unit regulated and not caused by a defective sender.
- If irregular engine running occurs in certain temperature ranges and the temperature figure does not increase without interruption, the temperature signal is temporarily interrupted and the sender must be renewed.

- Press ⇒key.
- Press keys 0 and 6 for the function "End output" and confirm entry with the Q key.
- Switch off ignition.

If the figure does not increase uniformly:

- Replace coolant temperature sender (G62) with coolant temperature gauge sender (G2) =>Page 81 , item 15 .
- Interrogate fault memory, if necessary, repair any faults and then erase fault memory => Page 10 , interrogating and erasing fault memory.

Continuation of test if constant 49.5°C or 99.0°C is displayed:

- Press ⇒key.
- Press keys 0 and 6 for the function "End output" and confirm entry with the Q key.

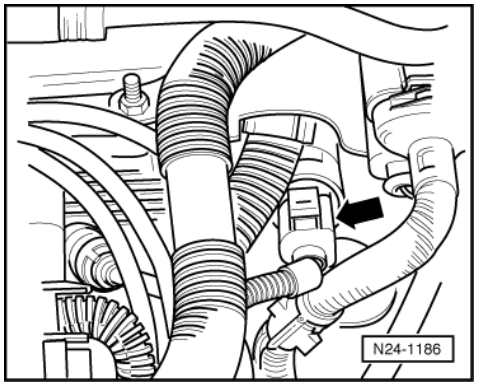

Protected by copyright. Copying for private or commercial purposes, part or complete, is not permitted unless authorised by Volkswagen AG. Volkswagen AG does not guarantee or accept any liability with respect to the correctness of information in this document. Copyright by Volkswagen AG.
satelettronica

- Switch off ignition.
- -> Pull the 4 pin connector off coolant temperature sender (G62) with coolant temperature gauge sender (G2) -arrow-.

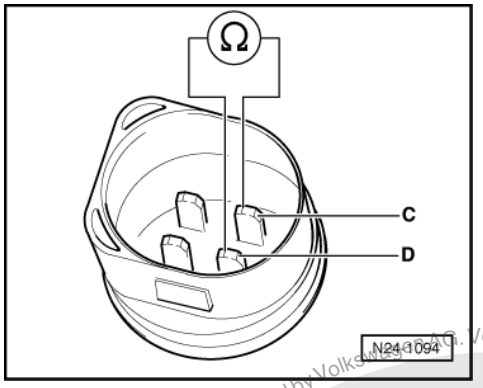

- -> Measure resistance of coolant temperature sender between contacts C (signal) and D (earth).

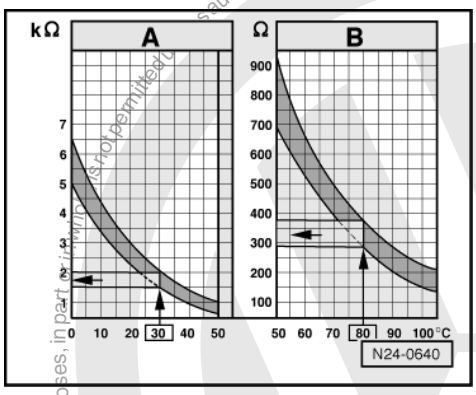

-> Specification see diagram

The diagram is divided into two temperature ranges:

A - From 0...50 °C
B - From 50...105 °C

Examples:

- 30 °C is in range A and corresponds to a resistance of 1.5...2.0 kω
- 80 °C is in range B and corresponds to a resistance of 275...375 ω

If the specification is not obtained:

- Replace coolant temperature sender (G62) with coolant temperature gauge sender (G2) =>Page 81 , item 15 .

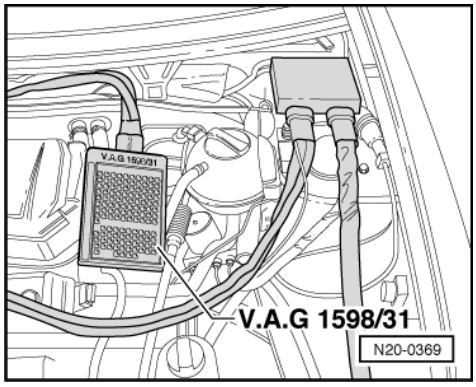

satelettronica

- Interrogate fault memory, if necessary, repair any faults and then erase fault memory => Page 10 , interrogating and erasing fault memory.

If the specification is obtained:

- Remove left cover for plenum chamber.
- -> Connect test box V.A.G 1598/31 to control unit wiring harness. The engine control unit remains disconnected.

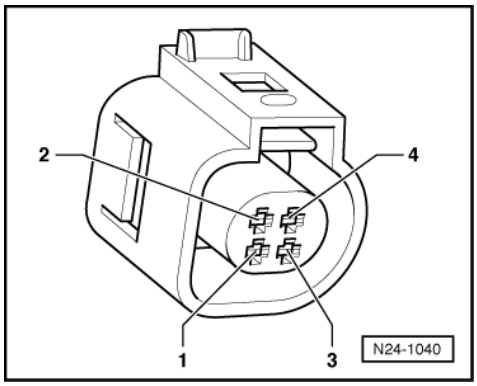

- -> Check wiring for open circuit between test box and 4-pin connector referring to current flow diagram.
  Contact 3 and test box socket 104
  Contact 4 and test box socket 83
  Wire resistance: max. 1.5 ω
- Additionally check wires for short to one another, to vehicle earth and to battery positive.
  Specification: ∞ω

If there is no fault in the wiring and the resistance measurement values are OK.:

- Replace engine control unit
  => Page 145 .

2.8 - Checking engine speed sender

Notes:

- The engine speed sender (G28) is a combined speed sender and reference mark sender.
- The engine can run without a signal from the G28. It is also possible (with considerable difficulty) to start the engine without a signal from the G28 (emergency running function).

Special tools, workshop equipment, testers, measuring instruments and auxiliary items required

- Hand multimeter V.A.G 1526 or multimeter V.A.G 1715
- Adapter set V.A.G 1594

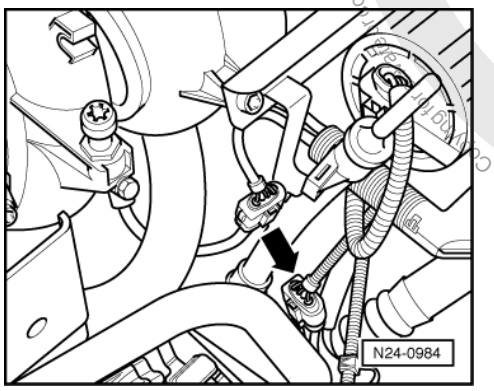

Protected by copyright. Copying for private or commercial purposes, in part or in whole, is not permitted unless authorised by Volkswagen AG. Volkswagen AG does not guarantee or accept any liability with respect to the correctness of information in this document. Copyright by Volkswagen AG.
satelettronica

Protected by copyright. Copyright by Volkswagen AG. Volkswagen AG does not guarantee or accept any liability with respect to the correctness of information in this document. Copyright by Volkswagen AG. Reproduction or commercial use is not permitted unless authorised by Volkswagen AG. Volkswagen AG does not guarantee or accept any liability with respect to the correctness of information in this document. Copyright by Volkswagen AG.

- Test box V.A.G 1598/31
- Current flow diagram

Test sequence

- -> Disconnect the grey 3-pin connector for the engine speed sender -arrow-.

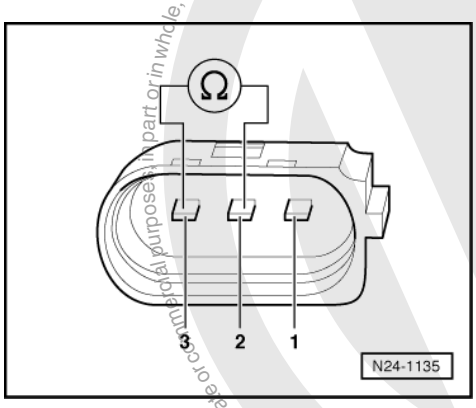

- -> Measure resistance between connector contacts 2 + 3 of engine speed sender.
  Specification: about 730...1000 ω(at room temperature)
- Check the sender for short between contacts 1+3 and 2+3.
  Specification: ∞ω

If the specifications are not obtained:

- Replace engine speed sender (G28) =>Page 82 , item 25 .
- Interrogate fault memory, if necessary, repair any faults and then erase fault memory => Page 10 , interrogating and erasing fault memory.

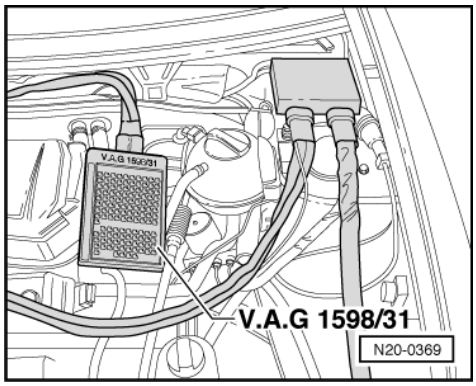

If no sender fault is detected:

- Remove left cover for plenum chamber.
- -> Connect test box V.A.G 1598/31 to control unit wiring harness. The engine control unit remains disconnected.

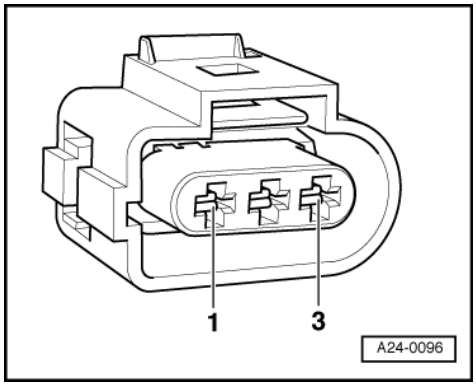

satelettronica

- -> Check wiring between test box and 3-pin connector for open circuit using current flow diagram.
  Contact 1 and test box socket 99
  Contact 2 and test box socket 98
  Contact 3 and test box socket 106
  Wire resistance: max. 1.5 ω
- Additionally check wires for short to one another, to vehicle earth and to battery positive.
  Specification: ∞ω

If no fault is detected in the wiring:

- Remove sender and check sender wheel for secure fit, damage and run-out.

Note:

There is a larger gap on the sender wheel. This gap is the reference mark and does not mean that the sender wheel is damaged.

If no fault is detected on sender wheel:

- Replace engine control unit
  => Page 145 .

2.9 - Checking injectors

Special tools, workshop equipment, testers, measuring instruments and auxiliary items required

- Hand multimeter V.A.G 1526 or multimeter V.A.G 1715
- Diode test lamp V.A.G 1527
- Adapter set V.A.G 1594
- Test box V.A.G 1598/31
- Current flow diagram

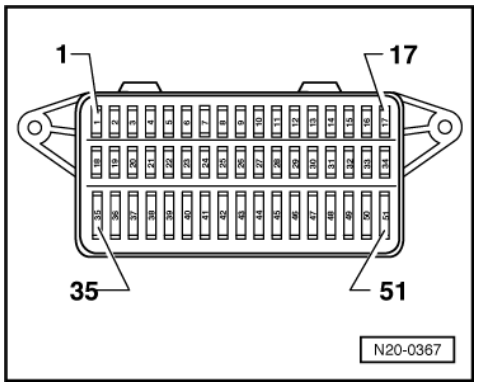

Check conditions

- -> Fuse No. 3 must be OK.
- The battery voltage must be at least 11.5 V.
- Earth connection in plenum chamber OK.
- All electrical consumers, e.g. lights and rear window heating must be switched off.
- If the vehicle is equipped with an air conditioning system, this must be switched off.
- Fuel pump relay must be OK =>Page 25 , final control diagnosis.
- Engine speed sender must be OK, checking =>Page 116 .
- Hall sender must be OK, checking
  =>Page 175 .

Protected by copyright. Copyright by Volkswagen AG. Volkswagen AG does not guarantee or accept any liability with respect to the correctness of information in this document. Copying for private or commercial purposes, in part or in whole, is not permitted unless authorised by Volkswagen AG.
satelettronica

Checking activation and voltage supply

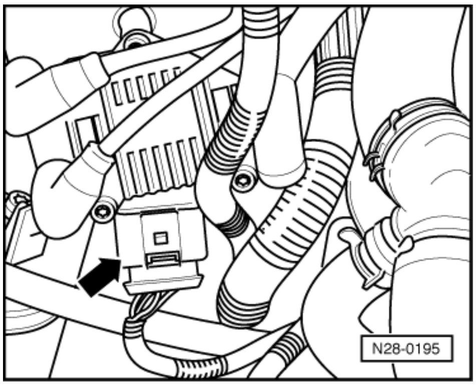

- Remove secondary air pump motor (V101) with bracket:

=> Repair group 26; Secondary air system; Removing and installing parts of the secondary air system Secondary air system Removing and installing parts of the secondary air system

- Remove intake manifold upper part => Page 79 , Removing and installing parts of injection system.
- -> Pull 4 pin connector off ignition transformer (N152) -arrow-.
- Pull plug off all injectors.

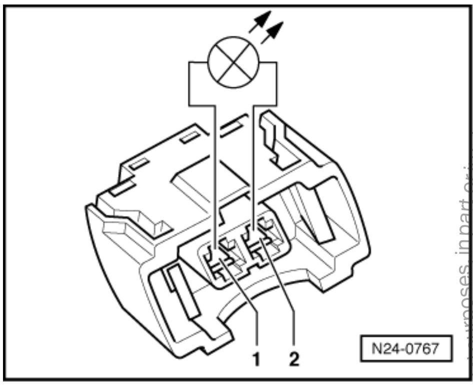

- -> Connect diode test lamp V.A.G 1527 using aux. cables from V.A.G 1594 to connector contacts of Cyl. 1.
- Operate the starter and check the voltage supply for No. 1 cylinder injector.
  The LED must flash.
- Repeat check at the injector connectors for Cyls. 2...4.
- Switch off ignition.

If the LED does not flash on one or more cylinders:

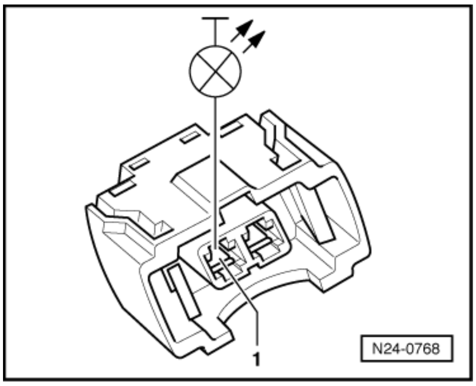

- -> Connect diode test lamp to contact 1 and earth of relevant injector connector.
- Operate the starter and check the voltage supply for No. 1 cylinder injector.
  The LED must light up
- Repeat check at the injector connectors for Cyls. 2...4.

Protected by copyright. Copying for private or commercial purposes, in part or in whole, is not permitted unless authorised by Volkswagen AG. Volkswagen AG does not guarantee or accept any liability with respect to the correctness of information in this document. Copyright by Volkswagen AG.
sateletronica

- Switch off ignition.

If the LED does not light up:

- Check wire between 2 pin connector contact 1 and fuel pump relay (J17) for open circuit using current flow diagram.
  Wire resistance: max. 1.5 ω

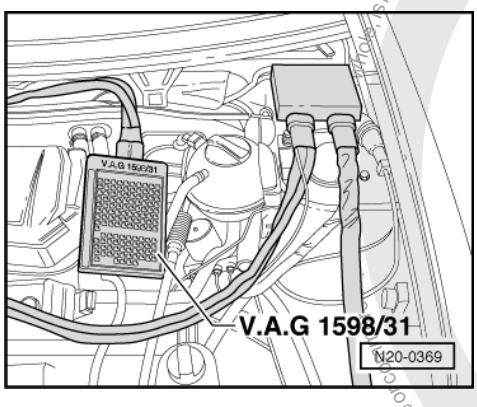

If the LED does not light up on one or several cylinders:

- Remove left cover for plenum chamber.
- -> Connect test box V.A.G 1598/31 to control unit wiring harness. The engine control unit remains disconnected.

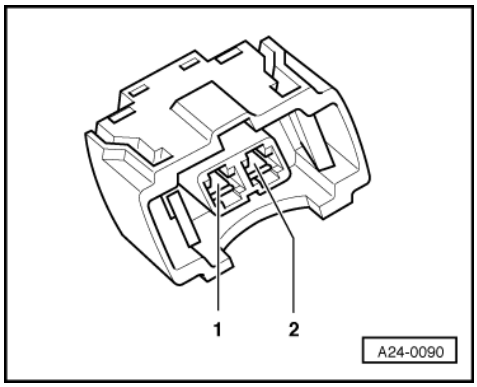

- -> Check wiring for open circuit between test box and 2-pin connector referring to current flow diagram.
  Injector 1: Contact 2 and socket 88
  Injector 2: Contact 2 and socket 87
  Injector 3: Contact 2 and socket 85
  Injector 4: Contact 2 and socket 86
  Wire resistance: max. 1.5 ω
- Additionally check wires for short to one another between contacts 2 to vehicle earth and to battery positive.
  Specification: ∞ω
- Check wiring between connector contacts 1 of injectors for open circuit to one another.
  Wire resistance: Max. 1.5 ω

If no fault is detected in the wiring:

- Check resistance of injectors
  => Page 121 .

Protected by copyright. Copyright by Volkswagen AG.
AG Volkswagen AG does not guarantee or accept any liability with respect to the correctness of information in this document. Copyright by Volkswagen AG.
unless authorised by Volkswagen AG is not permitted
satelettronica

Checking resistance of injectors

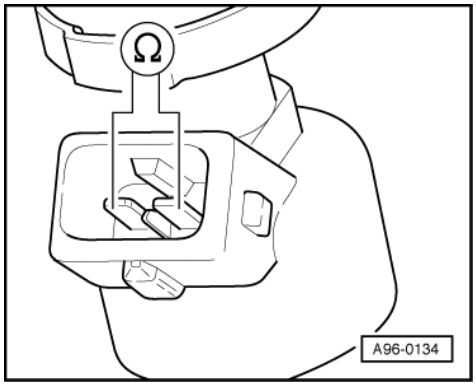

- -> Check resistance of injectors between contacts.
  Specification: 12.0...17.0 ω(at room temperature)

Note:

The resistance figures are valid for approx. 20 °C. At higher temperatures the resistance figures will increase.

If the specification is not attained:

- Renew defective injector
  =>Page 89 , item 6 .

Perform installation of injectors in reverse order. When doing this note the following:

- Renew O-rings on all injectors and lightly moisten with clean engine oil.
- Insert injectors vertically and in the correct position into the fuel rail and secure with retaining clips.
- With injectors secured to fuel rail, fit fuel rail on intake manifold lower part and press in evenly.

- Interrogate fault memory, if necessary, repair any faults and then erase fault memory => Page 10 , interrogating and erasing fault memory.
- Erase the learnt values and adapt the engine control unit again=> Page 147 .

If the resistances are OK and no faults can be detected in the wiring:

- Replace engine control unit
  => Page 145 .

Protected by copyright. Copyright for private or commercial purposes, in part or in whole is not permitted unless authorised by Volkswagen AG. Volkswagen AG does not guarantee or accept any liability with respect to the correctness of information in this document. Copyright by Volkswagen AG.
satelettronica

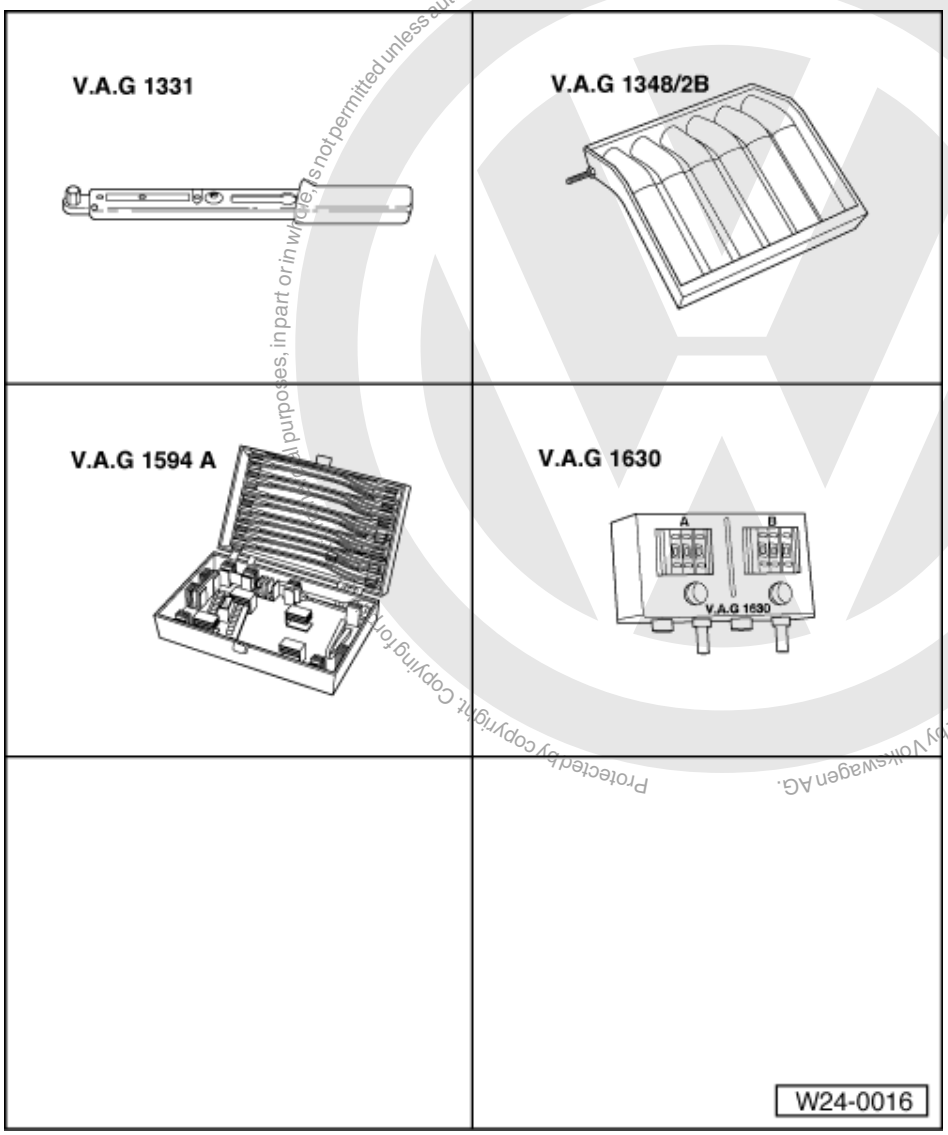

Protected by copyright. Copying for private or commercial purposes, in part or in whole, is not permitted unless authorised by Volkswagen AG. Volkswagen AG does not guarantee or accept any liability with respect to the correctness of information in this document. Copyright by Volkswagen AG.

satelettronica

Checking spray pattern and for leaks

Special tools, workshop equipment, test and measuring appliances and auxiliary items required

- V.A.G 1331 Torque wrench (5...50 Nm)
- V.A.G 1348/2 B Meter (for injection quantity)
- V.A.G 1594 A Adapter set
- V.A.G 1630 Digital potentiometer

Test conditions

- The fuel pressure must be in order, checking
  => Page 125 , checking fuel pressure regulator and holding pressure.

Test sequence

- Remove secondary air pump motor (V101) with bracket:

=> Repair group 26; Secondary air system; Removing and installing parts of the secondary air system Secondary air system Removing and installing parts of the secondary air system

- Remove intake manifold upper part => Page 79 , Removing and installing parts of injection system.

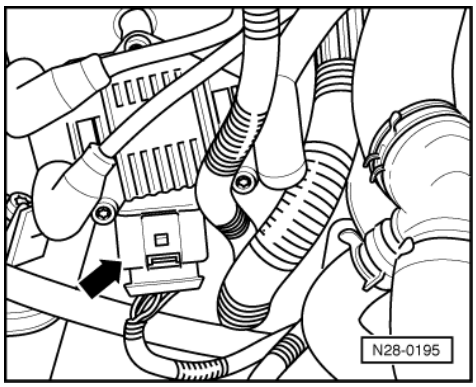

- -> Pull 4 pin connector off ignition transformer (N152) -arrow-.

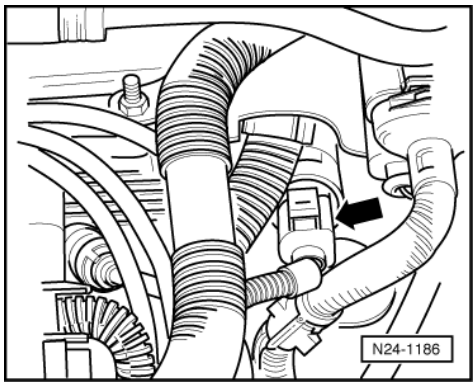

- -> Pull the 4 pin connector off coolant temperature sender (G62) with coolant temperature gauge sender (G2) -arrow-.

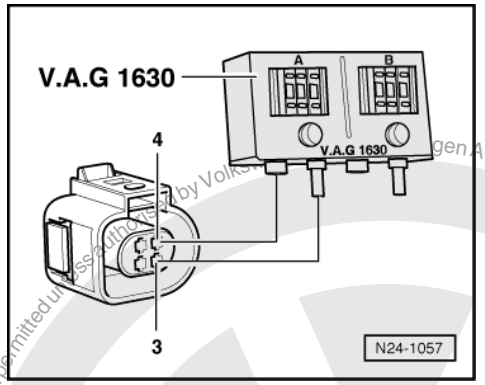

- -> Connect digital potentiometer V.A.G 1630 using aux. cables from V.A.G 1594 to connector contacts 3+4 and set connected side to 15 kω.
- Remove fuel rail complete with injectors from intake manifold lower part (reattach fuel hoses and injector connectors)=> Page 80 , item 11 .

Warning!
Fuel supply lines are under pressure! Before removing from hose connection wrap a cloth around the connection. Then release pressure by carefully pulling hose off connection.

Protected by copyright. Copying for private or commercial purposes, in part or in whole, is not permitted unless authorised by Volkswagen AG. Copyright by Volkswagen AG. Volkswagen AG does not guarantee or accept any liability with respect to the correctness of information in this document.
satelettronica

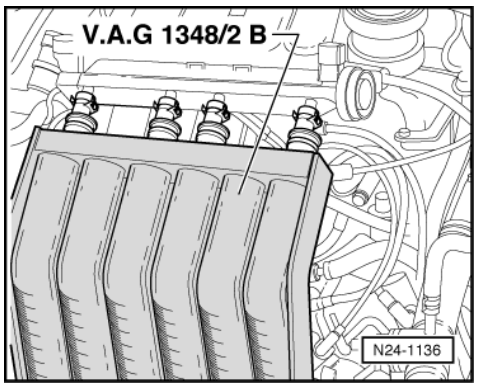

- -> Hold injectors in meter V.A.G 1348/2 B.
- Have 2nd person operate starter. Injector must spray in pulses according to firing order.
- Switch off ignition.
- Switch off ignition and afterwards check injectors for leaks. No more than
  2 drops/min
  may leak from each injector.

If the fuel loss is greater:

- Renew defective injector
  =>Page 89 , item 6 .

Perform installation of injectors in reverse order. When doing this note the following:

- Renew O-rings on all injectors and lightly moisten with clean engine oil.
- Insert injectors vertically and in the correct position into the fuel rail and secure with retaining clips.
- With injectors secured to fuel rail, fit fuel rail on intake manifold lower part and press in evenly.

- Interrogate fault memory, if necessary, repair any faults and then erase fault memory => Page 10 , interrogating and erasing fault memory.
- Erase the learnt values and adapt the engine control unit again=> Page 147 .

Protected by copyright. Copying for private or commercial purposes, in part or in whole, is not permitted unless authorised by Volkswagen AG. Volkswagen AG does not guarantee or accept any liability with respect to the correctness of information in this document. Copyright by Volkswagen AG.
satelettronica

2.10 - Checking fuel pressure regulator and holding pressure

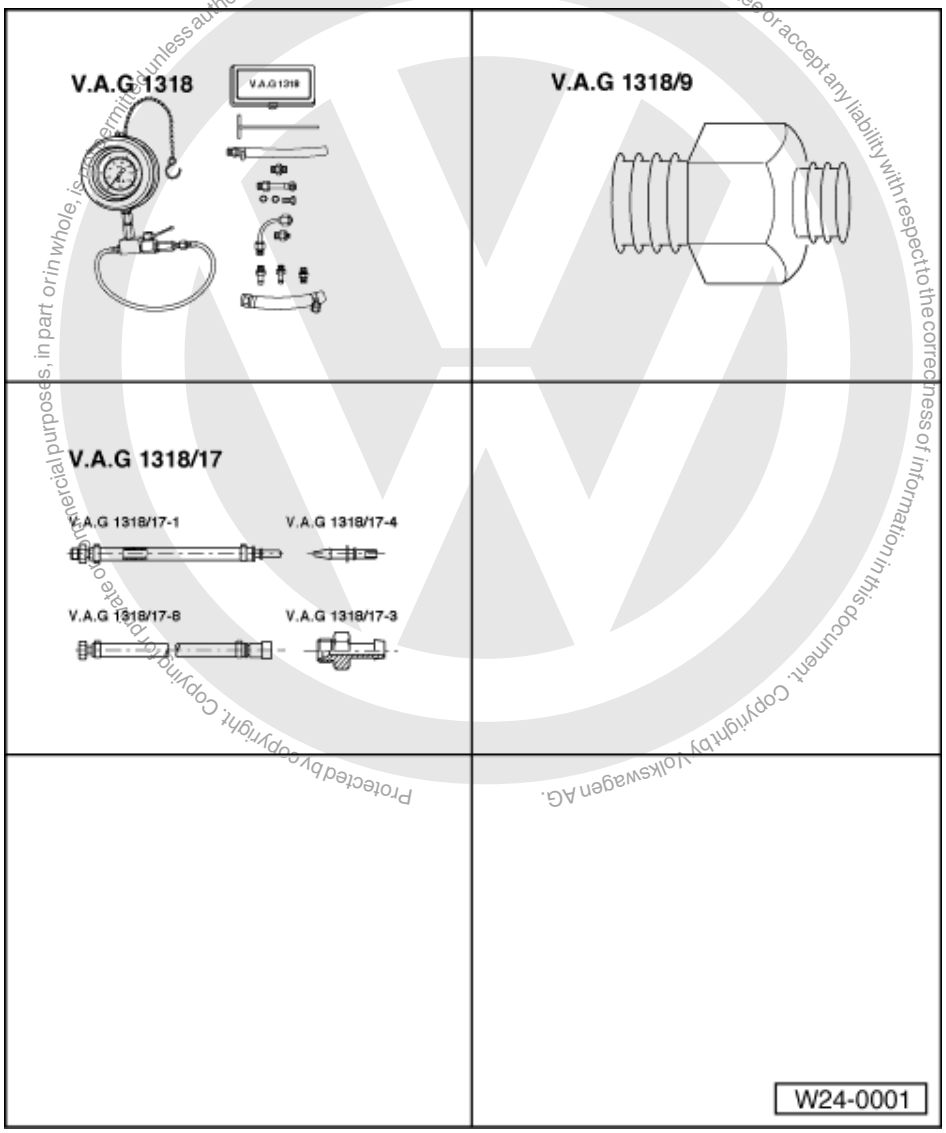

Function

The fuel pressure regulator regulates the fuel pressure depending on intake manifold pressure.

Special tools, workshop equipment, test and measuring appliances and auxiliary items required

- V.A.G 1318 Pressure gauge
- 1318/9 Adapter
- 1318/17 Adapter

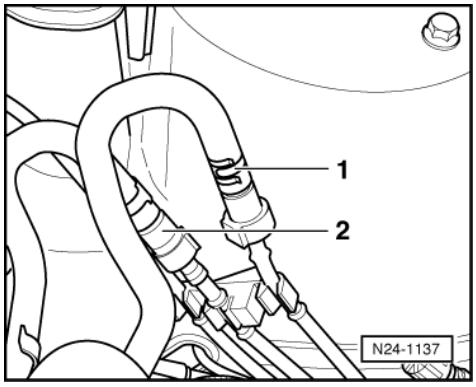

satelettronica

Test sequence

- -> Pull off supply pipe/hose -1- (with white marking) and collect fuel that leaks out with a cloth.

Note:

Press buttons on hose couplings to do this.

Warning!
Fuel supply lines are under pressure! Before removing from hose connection wrap a cloth around the connection. Then release pressure by carefully pulling hose off connection.

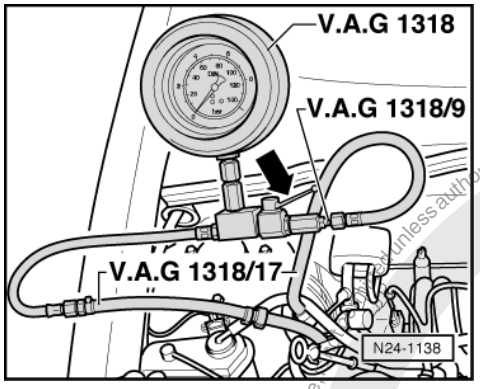

- -> Connect pressure tester V.A.G 1318 to fuel supply pipe and to fuel supply hose to fuel rail using adapters 1318/9 and 1318/17.
- Open shut-off tap on pressure gauge. The handle points in direction of flow.
- Start the engine and run at idling speed.
- Measure fuel pressure.
  Specification: Approx. 2.5 bar

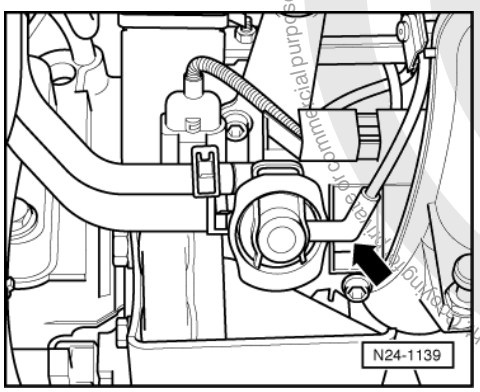

- -> Pull the vacuum hose off fuel pressure regulator -arrow-. The fuel pressure must increase to approx. 3.0 bar.
- Switch off ignition.

If the specification is not obtained:

- Check quantity supplied by fuel pump.

=> Rep. Gr. 20; Removing and installing parts of fuel system; checking fuel pump

If the specification is obtained:

- Check for leaks and holding pressure by observing pressure drop on gauge. After 10 minutes there must be
  a residual pressure of

satelettronica

at least 2.0 bar.

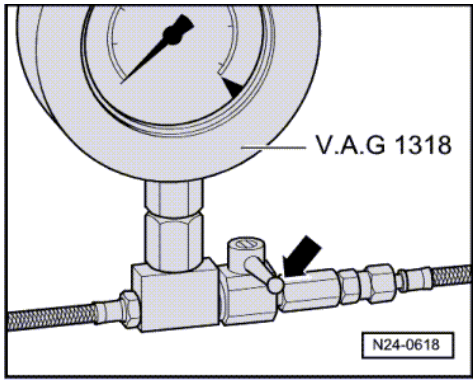

If the holding pressure drops below 2 bar:

- Start the engine and run at idling speed.
- -> Switch ignition off after the pressure has built-up. At the same time close pressure measured device cut-off tap (handle cross through-flow direction -arrow-).
- Observe pressure drop on gauge.

If the pressure does not drop:

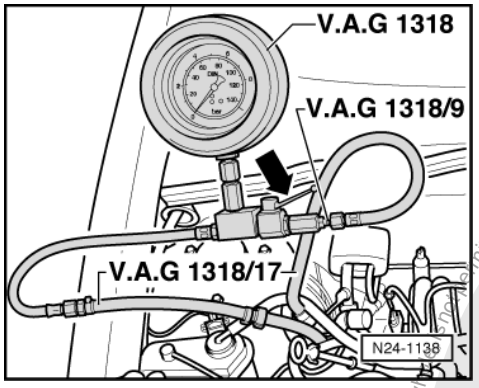

- Check fuel pump non-return valve.

=> Rep. Gr. 20; Removing and installing parts of fuel system; checking fuel pump

If the pressure drops again:

- -> Open pressure tester V.A.G 1318 shut-off tap (handle in through-flow direction).
- Start the engine and run at idling speed.

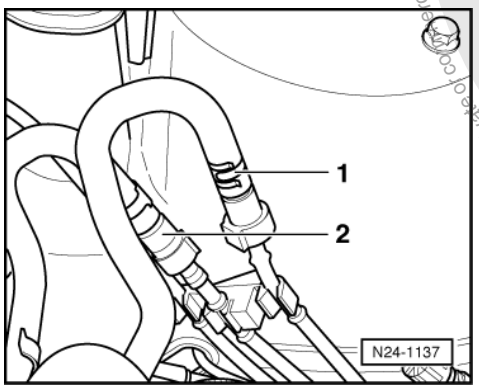

- -> Switch ignition off after the pressure has build-up. At the same time clamp-off the return hose (with blue marking) -2-.

Protected by copyright. Copying for private or commercial purposes, in part or in whole, is not permitted unless authorised by Volkswagen AG. Volkswagen AG does not guarantee or accept any liability with respect to the correctness of information in this document. Copyright by Volkswagen AG.
satelettronica

If the pressure does not drop:

- Renew fuel pressure regulator
  =>Page 90 , item 10 .

If the pressure drops again:

- Check pipe connections, O rings on fuel manifold and injectors for leaks.
- Check pressure gauge for leaks.

Note:

Before removing pressure gauge place a cloth around the connections to be loosened.

2.11 - Checking intake air system for leaks (unmetered air)

Checking with engine leak detector spray G 001 800 A1

Notes:

- The vacuum in the intake system will cause the leak detector spray to be drawn in with the unmetered air. The leak detector spray reduces the ignitability of the mixture. This leads to a drop in engine speed and to a change of Lambda probe reading.
- The safety precautions listed on the container must be adhered to.

Special tools, workshop equipment, testers, measuring instruments and auxiliary items required

- Fault reader V.A.G 1551 (or vehicle system tester V.A.G 1552) with cable V.A.G 1551/3
- Engine leak detector spray G 001 800 A1

Test conditions

- Coolant temperature must be at least 80 °C, =>display group 01, display zone 2.

Test sequence

- Connect fault reader V.A.G 1551 (V.A.G 1552). Start engine and select "Address word" 01 of engine control unit. When doing this the engine must be running at idling speed.
  (Connecting fault reader and selecting engine control unit => Page 4 .)

-> Indicated on display:

```
Rapid data transfer     HELP
Select function XXX
```

- Press keys 0 and 8 for the function "Read measured value block" and confirm entry with Q key.

-> Indicated on display:

```
Read measured value block
Input display group number XXX
```

- Press keys 0, 0 and 1 for "Display group number 1" and confirm entry with Q key.

-> Indicated on display:
(1...4 = Display zones)

```
Read measured value block 1
     1     2     3     4
```

Only continue with the test when

- The coolant temperature exceeds 80 °C

Copyright by Volkswagen AG. Volkswagen AG does not guarantee or accept any liability with respect to the correctness of information in this document. Copyright by Volkswagen AG. Copy or commercial purposes, in part or in whole, is not permitted unless authorised by Volkswagen AG.
satelettronica

-display zone 2-

- Observe the engine speed in display zone 1 and the Lambda regulation in display zone 3.
- Systematically spray parts of the intake system with engine leak detector spray.

If the engine speed drops or the Lambda regulator changes:

- Press ⇒key.
- Press keys 0 and 6 for the function "End output" and confirm entry with the Q key.
- Switch off ignition.
- Check sprayed areas of intake system for leaks and rectify if necessary.

3 - Checking functions

3.1 - Checking functions

3.2 - Idling check

Notes:

- Idling speed, ignition timing and CO content are not adjustable.
- The idling speed is regulated to specification by the throttle valve control part.
- Lambda regulation keeps the CO content at specification. Faults in Lambda regulation are detected by self-diagnosis and stored in fault memory.

Special tools, workshop equipment, testers, measuring instruments and auxiliary items required

- Fault reader V.A.G 1551 (or vehicle system tester V.A.G 1552) with cable V.A.G 1551/3

Check conditions

- Exhaust system between cylinder head and catalyst free of leaks
- All electrical consumers, e.g. lights and rear window heating must be switched off.
- If the vehicle is equipped with an air conditioning system, this must be switched off.
- Steering not on full lock
- Coolant temperature must be at least 80 °C, =>display group 01, display zone 2.

Test sequence

- Connect fault reader V.A.G 1551 (V.A.G 1552). Start engine and select "Address word" 01 of engine control unit. When doing this the engine must be running at idling speed.
  (Connecting fault reader and selecting engine control unit => Page 4 .)
- Interrogate fault memory, if necessary, repair any faults and then erase fault memory => Page 10 , interrogating and erasing fault memory.
- Then:
  - Leave fault reader V.A.G 1551 connected.
  - Continue running engine at idling speed.

-> Indicated on display:

```
Rapid data transfer      HELP
Select function XXX
```

- Press keys 0 and 8 for the function "Read measured value block" and confirm entry with Q key.

-> Indicated on display:

```
Read measured value block
Input display group number XXX
```

Protected by copyright. Copying for private or commercial purposes, in part or in whole, is not permitted unless authorised by Volkswagen AG. Volkswagen AG does not guarantee or accept any liability with respect to the correctness of information in this document. Copyright by Volkswagen AG.
satelettronica

- Press keys 0, 0 and 1 for "Display group number 1" and confirm entry with Q key.

-> Indicated on display:
(1...4 = Display zones)

```
Read measured value block 1
     1     2     3     4
```

- Check the adjustment conditions in display zone 4. Continue with test first when specifications are achieved.:
  Specification: 1x111111

  Significance of numbers in 8-digit number block
  => Page 50 .

- Briefly increase engine speed (rev- up) and then allow engine to run at idling speed for 2 minutes.

Checking idling speed

- Check idling speed in display zone 1.
  Specification: 760...880 rpm1)

  1) Up-to-date specifications:

=> Exhaust emissions test binder

- Press ⇒key.
- Press keys 0 and 6 for the function "End output" and confirm entry with the Q key.

If the idling speed is not obtained:

- Erase the learnt values and adapt the engine control unit again=> Page 147 .
- Carry out test drive.

Observe the valid safety precautions when carrying out a road test => Page 93 .

- Again interrogate the control unit fault memory.
- Repeat the idling check.

If the specifications are not obtained again:

- Check throttle valve control part
  => Page 108 .
- Check the operating condition of engine
  => Page 139 .
- Check intake system for leaks (unmetered air) => Page 128 .
- Check the signals from/to air conditioning system
  => Page 153 .

3.3 - Checking Lambda probe and Lambda regulation before catalyst

Note:

Only gold-plated contacts must be used to repair the contacts in the Lambda probes connectors.

Special tools, workshop equipment, testers, measuring instruments and auxiliary items required

- Hand multimeter V.A.G 1526 or multimeter V.A.G 1715
- Fault reader V.A.G 1551 (or vehicle system tester V.A.G 1552) with cable V.A.G 1551/3
- Adapter set V.A.G 1594

Protected copyright. Copying for private or commercial purposes, in part or in whole, is not permitted unless authorised by Volkswagen AG. Volkswagen AG does not guarantee or accept any liability with respect to the correctness of information in this document. Copyright by Volkswagen AG.
satelettronica

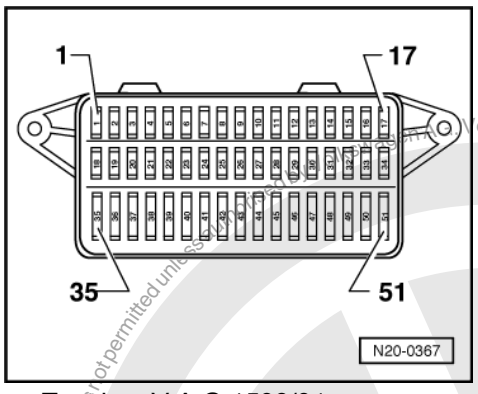

- Test box V.A.G 1598/31
- Current flow diagram

Check conditions

- -> The fuses 1, 3, 31, 34, 36 and 40 must be OK.
- The battery voltage must be at least 11.5 V.
- Earth connection in plenum chamber OK.
- All electrical consumers, e.g. lights and rear window heating must be switched off.
- If the vehicle is equipped with an air conditioning system, this must be switched off.
- Exhaust system between catalyst and cylinder head must be free of leaks
- No faults must be stored in fault memory => Page 10 , interrogating and erasing fault memory.
- Coolant temperature must be at least 80 °C, =>display group 01, display zone 2.
- Once started, the engine should only be run at idling speed. This allows the interference variable of the exhaust emissions test to be applied and prevents the coolant temperature sender from entering a fault in the fault memory.

  Wait at least 60 seconds before disconnecting the 4-pin connector from coolant temperature sender (G62).

Functional check

- Connect fault reader V.A.G 1551 (V.A.G 1552). Start engine and select "Address word" 01 of engine control unit. When doing this the engine must be running at idling speed.
  (Connecting fault reader and selecting engine control unit => Page 4 .)

-> Indicated on display:

```
Rapid data transfer      HELP
Select function XXX
```

- Press keys 0 and 8 for the function "Read measured value block" and confirm entry with Q key.

-> Indicated on display:

```
Read measured value block
Input display group number XXX
```

- Press keys 0, 0 and 1 for "Display group number 1" and confirm entry with Q key.

-> Indicated on display:
(1...4 = Display zones)

```
Read measured value block 1
     1     2     3     4
```

- Check whether the coolant temperature is above 80 °C in display zone 2.
- Change to display group 30 as follows:
- Press C key.

-> Indicated on display:

```
Read measured value block
Input display group number XXX
```

satelettronica

- Press keys 0, 3 and 0 for the "Display group number 30" and confirm entry with Q key.

-> Indicated on display:
(1...2 = Display zones)

```
Read measured value block 30
     1     2
```

- Check status of Lambda regulation before catalyst (display zone 1):
  Specification: 111

  Significance of numbers in 3-digit number block
  => Page 59 .

If the specification is not obtained:

- Check Lambda probe heating before catalyst
  => Page 95 .

If the specification is obtained:

- Change to display group 32 as follows:
- Press C key.
- Press keys 0, 3 and 2 for "Display group number 32" and confirm entry with Q key.

-> Indicated on display:
(1...2 = Display zones)

```
Read measured value block 32
     1     2
```

- Check Lambda learnt values at idling speed (additive) in display zone 1.
  Specification: -15.0...15.0 %
- Check Lambda learnt values at part load (multiplicative) in display zone 2.
  Specification: -20.0...20.0 %

If the specifications are not obtained:

- Press ⇒key.
- Press keys 0 and 6 for the "End output" function and confirm input with the Q key.
- Switch off ignition.
- =>Page 60 , Evaluating display group 32

If the specifications are obtained:

- Change to display group 33 as follows:
  V.A.G 1551: Press key 3
  V.A.G 1552: Press key ↑

-> Indicated on display:
(1= Display zones)

```
Read measured value block 33
     1
```

- Check Lambda regulation in display zone 1. The display should fluctuate slightly in the range of -10.0...10.0 %.

If the display in display zone 1 remains at a constant value:

- Press ⇒key.
- Press keys 0 and 6 for the function "End output" and confirm entry with the Q key.
- Switch off ignition.
- Check basic voltage of Lambda probe before catalyst => Page 134 .
- Check Lambda probe wiring for Lambda probe before catalyst
  => Page 134 .

satelettronica

If display fluctuates in display zone 1:

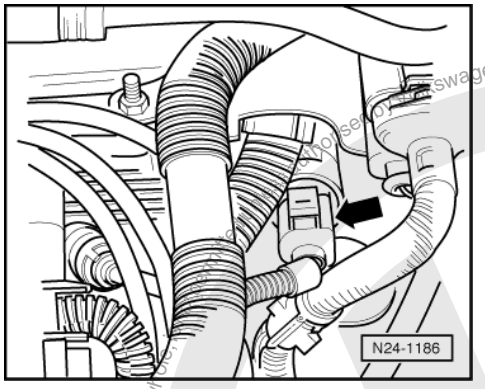

- -> Pull the 4 pin connector off coolant temperature sender (G62) with coolant temperature gauge sender (G2) -arrow-.

Note:
This test will only function if the engine has been running for at least 60 seconds at idling speed only. Once the connector has been disconnected, various component diagnostics and the Lambda regulator are electronically locked for 20 seconds. The fuel/air mixture is made richer and the Lambda probe has to recognise this with an increased display value.

- Observe Lambda regulation in display zone 1:
  The display must fall and then be corrected back to the specifica tion range -10.0...10.0 % within 60 seconds.

If the specification is not obtained:
- Reconnect 4-pin connector from coolant temperature sender (G62).
- Press ⇒key.
- Press keys 0 and 6 for the function "End output" and confirm entry with the Q key.
- Carry out a test drive to remove possible residue on Lambda probe and repeat check.

Observe the valid safety precautions when carrying out a road test => Page 93 .
If specification is not reached following a test drive:
- Renew Lambda probe before catalyst (G39)
  =>Page 71 , item 8 .
- Interrogate fault memory, if necessary, repair any faults and then erase fault memory => Page 10 , interrogating and erasing fault memory.
- Erase the learnt values and adapt the engine control unit again=> Page 147 .

If the specification is obtained:
- Reconnect 4-pin connector to coolant temperature sender (G62) immediately.
- Observe Lambda regulation in display zone 1 again:
  The display must rise and then be corrected back to the specifica tion range -10.0...10.0 % within 60 seconds.
- Press ⇒key.
- Press keys 0 and 6 for the function "End output" and confirm entry with the Q key.
- Switch off ignition.

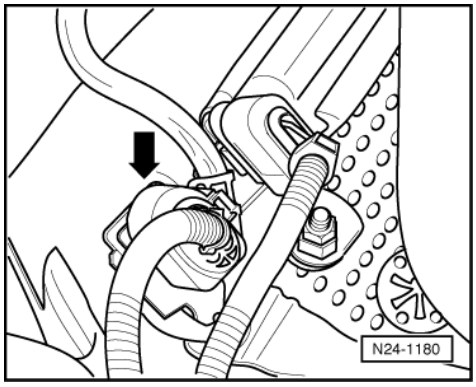

Copyright by Volkswagen AG. Volkswagen AG does not guarantee or accept any liability with respect to the correctness of information in this document. Copyright by Volkswagen AG.
satelettronica

Checking basic voltage of Lambda probe before catalyst

- -> Separate 6-pin connector (black) to Lambda probe before catalyst (G39) -arrow-.

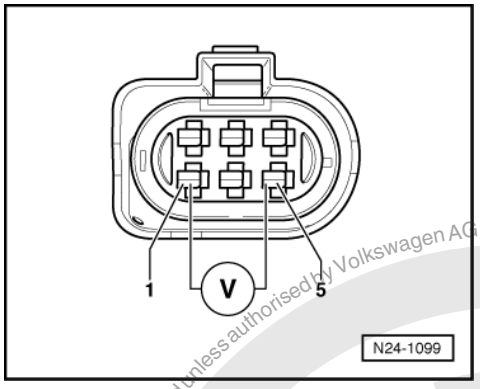

- -> Connect multimeter with aux. cables from V.A.G 1594 to measure voltage at contacts 1 + 5 (connector to engine control unit).
- Switch on ignition and measure basic voltage.
  Specification: 0.40...0.50 V
- Switch off ignition.

If the specification is not obtained:

- Check Lambda probe wiring for Lambda probe before catalyst
  => Page 134 .

If the specification is obtained:

- Renew Lambda probe before catalyst (G39)
  =>Page 71 , item 8 .
- Interrogate fault memory, if necessary, repair any faults and then erase fault memory => Page 10 , interrogating and erasing fault memory.
- Erase the learnt values and adapt the engine control unit again=> Page 147 .

Checking Lambda probe wiring for Lambda probe before catalyst

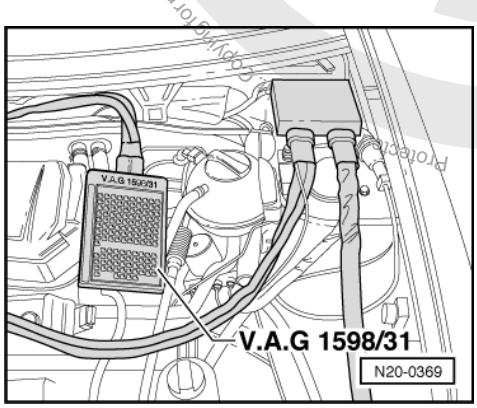

- Remove left cover for plenum chamber.
- -> Connect test box V.A.G 1598/31 to control unit wiring harness. The engine control unit remains disconnected.

Copyright by Volkswagen AG. Volkswagen AG does not guarantee or accept any liability with respect to the correctness of information in this document. Copying for private or commercial purposes, in whole or in part, is not permitted unless authorised by Volkswagen AG.
satelettronica

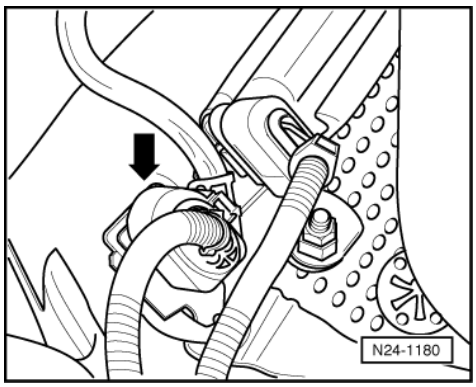

- -> Separate 6-pin connector (black) to Lambda probe before catalyst (G39) -arrow-.

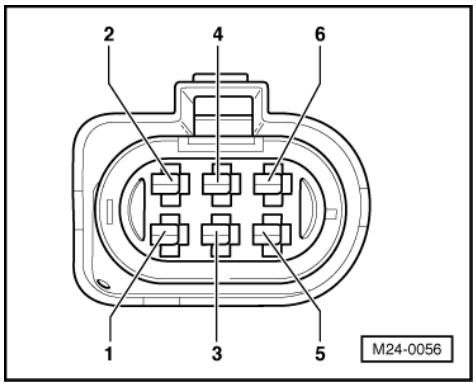

- -> Check wiring for open circuit between test box and 6-pin connector to control unit referring to current flow diagram.
  Contact 1 and test box socket 14
  Contact 2 and test box socket 15
  Contact 5 and test box socket 34
  Contact 6 and test box socket 33
  Wire resistance: max. 1.5 ω
- Check wiring on 6-pin connector additionally for short to one another.
  Specification: ∞ω

If no fault is detected in the wiring:

- Renew Lambda probe before catalyst (G39)
  =>Page 71 , item 8 .
- Interrogate fault memory, if necessary, repair any faults and then erase fault memory => Page 10 , interrogating and erasing fault memory.
- Erase the learnt values and adapt the engine control unit again=> Page 147 .

3.4 - Checking Lambda probe and Lambda regulation after catalyst

Notes:

- Only gold-plated contacts may be used to repair contacts 3 and 4 in the Lambda probe connectors.
- The Lambda regulation after catalyst is set above the Lambda regulation before catalyst and serves as a means of correction.

Special tools, workshop equipment, testers, measuring instruments and auxiliary items required

- Hand multimeter V.A.G 1526 or multimeter V.A.G 1715
- Fault reader V.A.G 1551 (or vehicle system tester V.A.G 1552) with cable V.A.G 1551/3
- Adapter set V.A.G 1594
- Test box V.A.G 1598/31

Protected by copyright. Copying for private or commercial purposes, in part or in whole, is not permitted unless authorised by Volkswagen AG. Volkswagen AG does not guarantee or accept any liability with respect to the correctness of information in this document. Copyright by Volkswagen AG.
satelettronica

- Current flow diagram

Check conditions

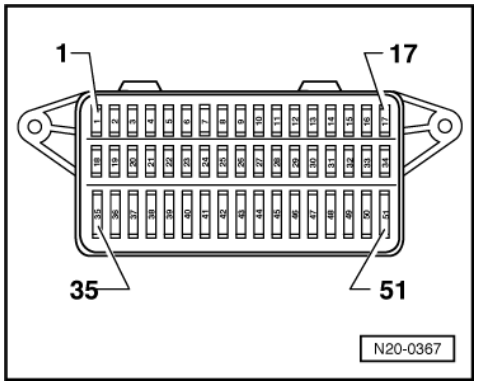

- -> The fuses 1, 3, 31, 34, 36 and 40 must be OK.
- The battery voltage must be at least 11.5 V.
- Earth connection in plenum chamber OK.
- All electrical consumers, e.g. lights and rear window heating must be switched off.
- If the vehicle is equipped with an air conditioning system, this must be switched off.
- Exhaust system between catalyst and cylinder head must be free of leaks
- No faults must be stored in fault memory => Page 10 , interrogating and erasing fault memory.
- Coolant temperature must be at least 80 °C, =>display group 01, display zone 2.

Functional check

- Connect fault reader V.A.G 1551 (V.A.G 1552). Start engine and select "Address word" 01 of engine control unit. When doing this the engine must be running at idling speed.
  (Connecting fault reader and selecting engine control unit => Page 4)

-> Indicated on display:

```
Rapid data transfer      HELP
Select function XXX
```

- Press keys 0 and 8 for the function "Read measured value block" and confirm entry with Q key.

-> Indicated on display:

```
Read measured value block
Input display group number XXX
```

- Press keys 0, 0 and 1 for "Display group number 1" and confirm entry with Q key.

-> Indicated on display:
(1...4 = Display zones)

```
Read measured value block 1
     1     2     3     4
```

- Check whether the coolant temperature is above 80 °C in display zone 2.
- Change to display group 30 as follows:
- Press C key.

-> Indicated on display:

```
Read measured value block
Input display group number XXX
```

- Press keys 0, 3 and 0 for the "Display group number 30" and confirm entry with Q key.

-> Indicated on display:
(1...2 = Display zones)

satelettronica

```
Read measured value block 30
     1     2
```

- Check Lambda regulation status after catalyst (display zone 2):
  Specification: 111

  Significance of numbers in 3-digit number block
  => Page 59 .

If the specification is not obtained:

- Check Lambda probe heating after catalyst
  => Page 98 .

If the specification is obtained:

- Change to display group 43 as follows:
- Press C key.

-> Indicated on display:

```
Read measured value block
Input display group number XXX
```

- Press keys 0, 4 and 3 for "Display group number 43" and confirm entry with Q key.

-> Indicated on display:
(1...4 = Display zones)

```
Read measured value block 43
     1     2     3     4
```

- Check Lambda probe voltage in display zone 3.
  The voltage must fluctuate slightly in the range of
  0.00...1.00 V.
- Press ⇒key.
- Press keys 0 and 6 for the function "End output" and confirm entry with the Q key.
- Switch off ignition.

If the display in display zone 3 remains at a constant value:

- Continue check according to following table.

Appears on display	Possible fault cause	Fault elimination
Constant approx. 5.00 V	- Short to positive via: - Lambda probe, probe wiring, earth wiring, engine control unit	- Check wiring of Lambda probe after catalyst => Page 138
Constant 0.00 V	- Short to earth via: - Lambda probe, probe wiring, earth wiring, engine control unit	

Protected by copyright. Copying for private or commercial purposes, in part or in whole, is not permitted unless authorised by Volkswagen AG. Volkswagen AG does not guarantee or accept any liability with respect to the correctness of information in this document. Copyright by Volkswagen AG.
satelettronica

Constant between 0.39...0.50 V	- Open circuit via: - Lambda probe, probe wiring, earth wiring, engine control unit	

If the specifications are not reached during operation of Lambda regulation after catalyst or the probe voltage does not fluctuate as stated:

- Carry out a test drive to remove possible residue on Lambda probe and repeat check.

Observe the valid safety precautions when carrying out a road test => Page 93 .

If specification is not reached following test drive:

- Replace the Lambda probe after catalyst (G130) => Page 72 , item 9 .
- Interrogate fault memory, if necessary, repair any faults and then erase fault memory => Page 10 , interrogating and erasing fault memory.
- Erase the learnt values and adapt the engine control unit again=> Page 147 .

Checking Lambda probe wiring for Lambda probe after catalyst

- Remove left cover for plenum chamber.

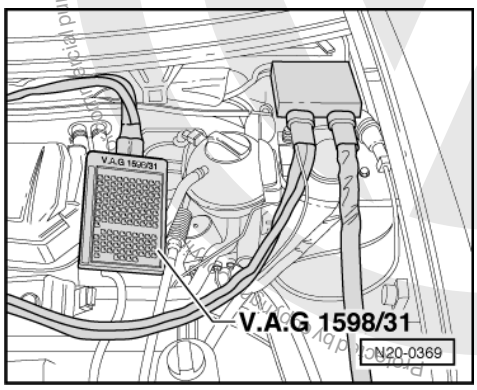

- -> Connect test box V.A.G 1598/31 to control unit wiring harness. The engine control unit remains disconnected.

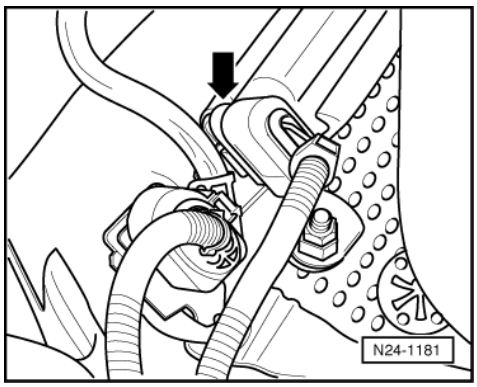

- -> Separate 4-pin connector (black) to Lambda probe after catalyst (G130) -arrow-.

satelettronica

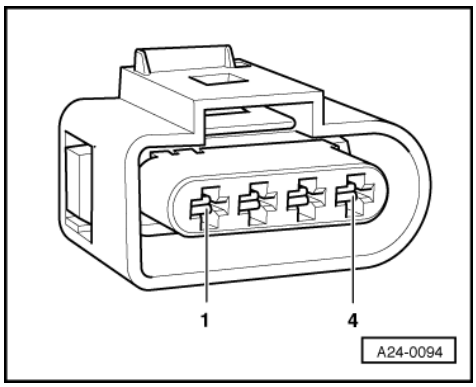

- -> Check wiring for open circuit between test box and 4-pin connector referring to current flow diagram.
  Contact 3 and test box socket 35
  Contact 4 and test box socket 16
  Wire resistance: max. 1.5 ω
- Additionally check wiring at 4-pin connector for short to one another.
  Specification: ∞ω

If no fault is detected in the wiring:

- Replace the Lambda probe after catalyst (G130) => Page 72 , item 9 .
- Interrogate fault memory, if necessary, repair any faults and then erase fault memory => Page 10 , interrogating and erasing fault memory.
- Erase the learnt values and adapt the engine control unit again=> Page 147 .

3.5 - Checking engine operating mode

Note:

Checks whether engine control unit recognises the engine operating modes idling, overrun, part throttle, enrichment, full throttle.

Special tools, workshop equipment, testers, measuring instruments and auxiliary items required

◆ Fault reader V.A.G 1551 or vehicle system tester V.A.G 1552 with cable V.A.G 1551/3

Check conditions

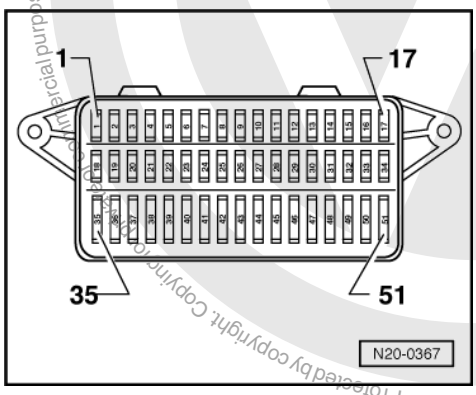

- -> Fuses 13 and 36 must be OK.
- Coolant temperature must be at least 80 °C, =>display group 01, display zone 2.

Test sequence

- Connect fault reader V.A.G 1551 (V.A.G 1552). Start engine and select "Address word" 01 of engine control unit. When doing this the engine must be running at idling speed.

satelettronica

(Connecting fault reader and selecting engine control unit => Page 4 .)

-> Indicated on display:

```
Rapid data transfer     HELP
Select function XXX
```

- Press keys 0 and 8 for the function "Read measured value block" and confirm entry with Q key.

-> Indicated on display:

```
Read measured value block
Input display group number XXX
```

- Press keys 0, 0 and 1 for "Display group number 1" and confirm entry with Q key.

-> Indicated on display:
(1...4 = Display zones)

```
Read measured value block 1
     1     2     3     4
```

- Check whether the coolant temperature is above 80 °C in display zone 2.
- Change to display group 5 as follows:
- Press C key.

-> Indicated on display:

```
Read measured value block
Input display group number XXX
```

- Press keys 0, 0 and 5 for "Display group number 5" and confirm entry with Q key.

-> Indicated on display:
(1...4 = Display zones)

```
Read measured value block 5
     1     2     3     4
```

- Check whether the control unit recognises the operating mode (display zone 4):

◆ Idling:

As long as the engine is running at idling speed idling must be displayed
Display: Idling

◆ Overrun mode:

- Increase engine speed to above 3000 rpm.
- Quickly release accelerator pedal.

As long as the engine speed is above 1400 rpm overrun must be displayed
Display: Overrun

Note:

Below 1400 rpm idling speed will be recognised.

◆ Part throttle:

- Rev up evenly.

As long as the engine is being revved up evenly, part throttle must be displayed
Display: Part throt.

◆ Enrichment:

Protected by copyright. Copying for private or commercial purposes, in part or in whole, is not permitted unless authorised by Volkswagen AG. Volkswagen AG does not guarantee or accept any liability with respect to the correctness of information in this document. Copyright by Volkswagen AG.

satelettronica

- Floor accelerator pedal (onto throttle valve stop).

  Acceleration enrichment must be displayed briefly
  Display: Enrichment

◆ Full throttle:

- Floor accelerator pedal (onto throttle valve stop).

  Full throttle must be displayed briefly
  Display: Full throttle

Note:

A test drive may have to be performed to show "Full throttle" in display.

Observe the valid safety precautions when carrying out a road test => Page 93 .

- Press ⇒key.
- Press keys 0 and 6 for the function "End output" and confirm entry with the Q key.
- Switch off ignition.

If the specifications are not attained:

- Interrogate fault memory, if necessary, repair any faults and then erase fault memory => Page 10 , interrogating and erasing fault memory.
- Check throttle valve control part
  => Page 108 .

3.6 - Checking intake manifold change-over

The check need only be carried out when performance is poor.

Special tools, workshop equipment, testers, measuring instruments and auxiliary items required

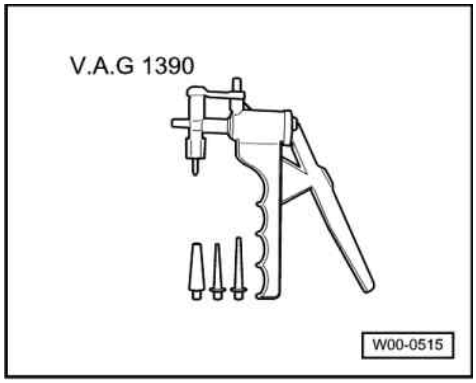

◆ Hand vacuum pump V.A.G 1390
◆ Hand multimeter V.A.G 1526 or multimeter V.A.G 1715
◆ Fault reader V.A.G 1551 (or vehicle system tester V.A.G 1552) with cable V.A.G 1551/3
◆ Adapter set V.A.G 1594
◆ Test box V.A.G 1598/31
◆ Current flow diagram

Checking function

- Start engine and run at idling speed.

Protected by copyright. Copying for private or commercial purposes, in part or in whole, is not permitted unless authorised by Volkswagen AG. Volkswagen AG does not guarantee or accept any liability with respect to the correctness of information in this document. Copyright by Volkswagen AG.
satelettronica

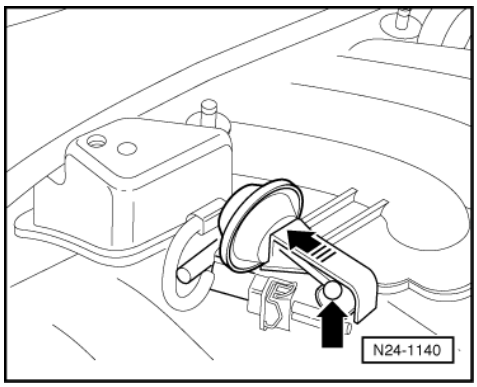

- Increase engine speed abruptly (throttle burst). The intake manifold change-over vacuum unit must operate in direction of arrow during this.

If change-over does not occur, the following checks must be carried out.

- Switch off ignition.
- First check activation of twin path intake manifold change-over valve (N156) via final control diagnosis => Page 25 .

If activation is OK:

- The fault reader or the vehicle system tester must remain connected.

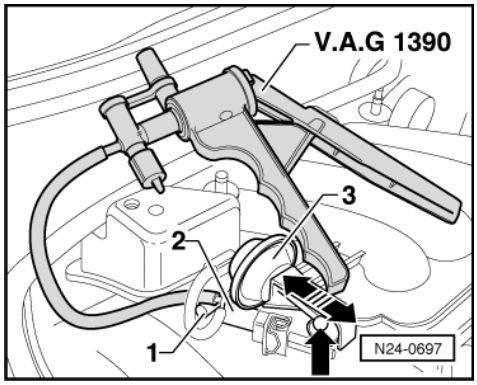

- -> Pull vacuum hose -1- off intake manifold change-over valve -2- and connect hand vacuum pump V.A.G 1390 to connection.
- Perform final control diagnosis again. When the valve for intake manifold change-over is activated, operate hand pump uniformly.
  The actuator -3- must switch to and fro between both positions.

If the change-over does not function as described:

- Check change-over mechanics for freedom of movement. To do this operate rods by hand.
- Check vacuum pipes for correct connection.
- Check vacuum system including vacuum reservoir in intake manifold upper part for leaks.

Protected by copyright. Copying for private or commercial purposes, in part or in whole, is not permitted unless authorised by Volkswagen AG. Volkswagen AG does not guarantee or accept any liability with respect to the correctness of information in this document. Copyright by Volkswagen AG.
satelettronica

4 - Engine control unit

4.1 - Engine control unit

4.2 - Function

Following evaluation of the input signals, the engine control unit regulates injection, throttle valve control part, ignition, activated charcoal filter solenoid valve 1, governed speed, overrun shut-off, variable intake manifold, exhaust gas recirculation, secondary air system and self-diagnosis.

4.3 - Checking control unit voltage supply

Special tools, workshop equipment, testers, measuring instruments and auxiliary items required

- Hand multimeter V.A.G 1526 or multimeter V.A.G 1715
- Fault reader V.A.G 1551 (or vehicle system tester V.A.G 1552) with cable V.A.G 1551/3
- Adapter set V.A.G 1594
- Test box V.A.G 1598/31
- Current flow diagram

Check conditions

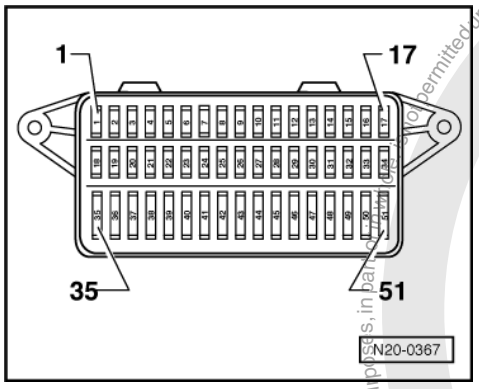

- -> Fuses 13 and 36 must be OK.
- The battery voltage must be at least 11.5 V.
- Earth connection in plenum chamber OK.
- All electrical consumers, e.g. lights and rear window heating must be switched off.
- If the vehicle is equipped with an air conditioning system, this must be switched off.
- Alternator OK, checking:

=> Current flow diagrams, Electrical fault finding and Fitting locations

Test sequence

- Connect fault reader V.A.G 1551 (V.A.G 1552). Start engine and select "Address word" 01 of engine control unit. When doing this the engine must be running at idling speed.
  (Connecting fault reader and selecting engine control unit => Page 4 .)

-> Indicated on display:

```
Rapid data transfer      HELP
Select function XXX
```

- Press keys 0 and 8 for the function "Read measured value block" and confirm entry with Q key.

-> Indicated on display:

satelettronica

```
Read measured value block
Input display group number XXX
```

- Press keys 0, 0 and 4 for "Display group number 4" and confirm entry with Q key.

-> Indicated on display:
(1...4 = Display zones)

```
Read measured value block 4
     1     2     3     4
```

- Read off figure displayed in display zone 2.
  Specification: At least 11.5 V
- Press the ⇒key.
- Press keys 0 and 6 for the "End output" function and confirm input with the Q key.

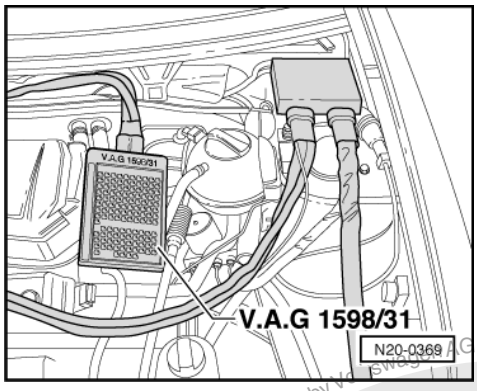

- Switch off ignition.

If the specification is not attained:

- Remove left cover for plenum chamber.
- -> Connect test box V.A.G 1598/31 to control unit wiring harness. The engine control unit remains disconnected.

Testing voltage supply for Simos control unit current supply relay (J363)

- Measure voltage supply using multimeter and auxiliary cables from V.A.G 1594 between test box sockets 1 + 3 and 2 + 3.
- Switch on ignition.
  Specification: min. 11.5 V
- Switch off ignition.

If the specification is not attained:

- Check wiring connections to Simos control unit voltage supply relay (J363) on relay plate, relay position 4 and earth connections of engine control unit using current flow diagram:

=> Current flow diagrams, Electrical fault finding and Fitting locations

- Interrogate fault memory, if necessary, repair any faults and then erase fault memory => Page 10 , interrogating and erasing fault memory.
- Erase the learnt values and adapt the engine control unit again=> Page 147 .

Checking voltage supply terminal 15

- Measure supply voltage with multimeter and adapter cables from V.A.G 1594 between sockets 1 + 62 and 2 + 62 of test box:
- Switch on ignition.
  Specification: min. 11.5 V
- Switch off ignition.

satelettronica

If the specification is not attained:

- Check wiring connection to fuse carrier and earth connections of engine control unit using current flow diagram:

=> Current flow diagrams, Electrical fault finding and Fitting locations

- Interrogate fault memory, if necessary, repair any faults and then erase fault memory => Page 10 , interrogating and erasing fault memory.
- Erase the learnt values and adapt the engine control unit again=> Page 147 .

4.4 - Replacing engine control unit

Special tools, workshop equipment, testers, measuring instruments and auxiliary items required

◆ Fault reader V.A.G 1551 with cable V.A.G 1551/3

Work sequence

- First print out the control unit identification and thereby the previous control unit coding as follows:
- Connect the fault reader V.A.G 1551 (V.A.G 1552). Then switch ignition on and select engine control unit with the "Address word" 01.
  (Connecting fault reader and selecting engine control unit => Page 4 .)

-> The control unit identification and coding are indicated on the display e.g.:

```
6K0906033A 1.6l/2V SIMOS3 00HSS105 "
Coding 00011     WSC XXXXX
```

- Print out the control unit identification by pressing the fault reader print button.
- Press the ⇒key.
- Press keys 0 and 6 for the function "End output" and confirm entry with the Q key.

-> Indicated on display:

```
Rapid data transfer     HELP
Select function XXX
```

- Switch off ignition.
- Remove left cover for plenum chamber.
- Unlock the engine control unit connector and pull it off.

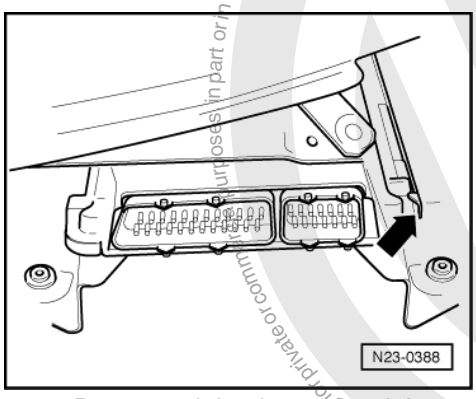

- -> Press retaining lug to the right -arrow- and pull control unit out of bracket.

Installing

- Place the new control unit into the retaining frame.
- Install control unit connector and lock.
- Check the previous coding and the coding of the new control unit => Page 146 .

satelettronica

- Adapt new control unit to the electronic immobilizer.

=> Electrical system; Repair group 01; Immobilizer self-diagnosis; Adaption following renewal of engine control unit Immobilizer self-diagnosis Adaption following renewal of engine control unit

- Interrogate fault memory, if necessary, repair any faults and then erase fault memory => Page 10 , interrogating and erasing fault memory.
- Erase the learnt values and adapt the engine control unit again=> Page 147 .
- Perform idling speed check
  => Page 129 .
- Carry out test drive.

Observe the valid safety precautions when carrying out a road test => Page 93 .

During the road test the following operating conditions must be fulfilled:
- The coolant temperature must exceed 80 °C .
- When the temperature is reached, the operating conditions
  Idling
  Part throttle
  Enrichment
  Full throttle
  Overrun
  must be attained several times.

- Again interrogate the control unit fault memory.

4.5 - Coding engine control unit

Notes:

- A 5-character code must always be displayed during the control unit identification.
- Read measured value block 125 to see which control units are connected to engine control unit via data bus =>Page 68 , Evaluating measured value block, display groups 120...129 - Communication.
- The control unit must be recoded as follows if the vehicle relevant coding is not displayed or the control unit has been renewed.

Special tools, workshop equipment, testers, measuring instruments and auxiliary items required

- Fault reader V.A.G 1551 with cable V.A.G 1551/3

Test conditions

- The coolant temperature should only be a maximum of 80°C, =>display group 01, display zone 2

Work sequence

- Connect the fault reader V.A.G 1551 (V.A.G 1552). Then switch ignition on and select engine control unit with the "Address word" 01.
  (Connecting fault reader and selecting engine control unit => Page 4 .)

-> Indicated on display:

```
Rapid data transfer      HELP
Select function XXX
```

- Press keys 0 and 7 for the function "Code control unit" and confirm entry with Q key.

-> Indicated on display:

```
Coding control unit      Q
Enter code number XXXXX      (0-32000)
```

- Enter the relevant code number for this vehicle and confirm with Q key.

Protected by copyright. Copying for private or commercial purposes, in part or in whole, is not permitted unless authorised by Volkswagen AG. Volkswagen AG does not guarantee or accept any liability with respect to the correctness of information in this document. Copyright by Volkswagen AG.
satelettronica

Coding variations for engine control unit => Page 147 .

-> The control unit identification and the coding are indicated on the display, e.g.:

```
6K0906033A
```

- Press the ⇒key.
- Press keys 0 and 6 for the function "End output" and confirm entry with the Q key.
- Switch off ignition and wait for control unit run-on to end (approx. 25 seconds).

-> Indicated on display when a non-authorised code number has been entered.

```
Function is not recognised or cannot
be performed at the moment.
```

Note:

The engine control unit doesn't store the entered code (shown on display) until ignition has been switched off and control unit run-on has ended (25 seconds). Incorrect coding could lead to:

- Engine running faults (gear change jerks, load change jerks, etc.)
- Increased fuel consumption
- Increased emissions
- Faults stored in fault memory which are not actually present
- Reduced gearbox life
- Functions will not be performed (Lambda regulation, activation of the activated charcoal filter system, etc.).

4.6 - Coding variations of engine control unit

1st position: Vehicle code	2nd position: Emissions code	3rd position: Special code	4th position: Data bus code	5th position: Gearbox code
0 = No code	0 = No code	0 = No code	0 = No code	0 = No code
1 = ---	1 = ---	1 = ---	1 = Only ABS with data bus	1 = 5-speed manual gearbox
2 = ---	2 = ---	2 = ---	2 = Only airbag with data bus	2 = 6-speed manual gearbox
3 = ---	3 = ---	3 = ---	3 = ABS and airbag with data bus	3 = Automatic gearbox
4 = ---	4 = ---	4 = ---	4 = ---	4 = ---

Note:

At the moment only codings 00001 and 00011 can be performed, as the airbag system has not yet been equipped with data bus, there are only vehicles with 5-speed manual gearbox.

The code number is compiled as shown in the following example:

1st position: Vehicle code (no code at present)	0				
2nd position: Emissions code (no code at present)		0			
3rd position: Special code (no code a present)			0		
4th position: Data bus code (only ABS with data bus)				1	
5th position: Gearbox code (5-speed manual gearbox)					1
Code:	0	0	0	1	1

4.7 - Erasing learnt values and adapting engine control unit to throttle valve control part and exhaust gas recirculation valve

First of all, the old learnt values are erased. This is necessary to neutralise learnt values, which may be at the limit. During adaption (ignition switched on, engine not running), the engine control unit learns various positions

Protected by copyright. Copying for private or commercial purposes, in part or in whole, is not permitted unless authorised by Volkswagen AG. Volkswagen AG does not guarantee or accept any liability with respect to the correctness of information in this document. Copyright by Volkswagen AG.
satelettronica

of the throttle valve control part and exhaust gas recirculation valve. These positions are stored in the control unit.

Adapting sequence must be performed if:

- The throttle valve control part has been removed and installed and cleaned if necessary.
- The throttle valve control part or the exhaust gas recirculation valve have been renewed.
- With a new engine, a new throttle valve control part or a new exhaust gas recirculation valve has been fitted.
- Defective components such as Lambda probes and injectors have been replaced.

Special tools, workshop equipment, testers, measuring instruments and auxiliary items required

- Fault reader V.A.G 1551 or vehicle system tester V.A.G 1552 with cable V.A.G 1551/3

Check conditions

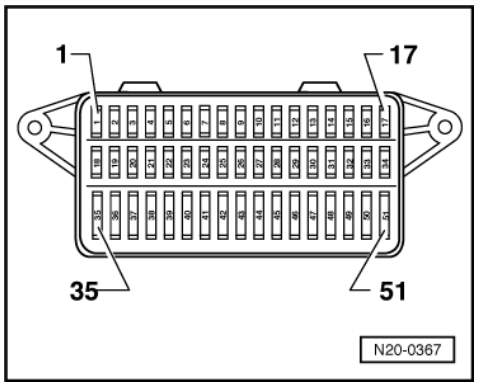

- -> Fuses 13 and 36 must be OK.
- The battery voltage must be at least 11.5 V.
- Earth connection in plenum chamber OK.
- All electrical consumers, e.g. lights and rear window heating must be switched off
- If the vehicle is equipped with an air conditioning system, this must be switched off.
- The throttle valve must be at idling speed position (The accelerator must not be operated during the test).
- The throttle valve part must not be dirty (carbonization).
- No faults must be stored in fault memory => Page 10 , interrogating and erasing fault memory.
- The intake air temperature must be at least 6 °C =>display group 04, display zone 4.
- Coolant temperature must be 5...115 °C =>display group 01, display zone 2.

Work sequence

- Connect the fault reader V.A.G 1551 (V.A.G 1552). Then switch ignition on and select engine control unit with the "Address word" 01.
  (Connecting fault reader and selecting engine control unit => Page 4 .)

-> Indicated on display:

```
Rapid data transfer      HELP
Select function XXX
```

- Press keys 1 and 0 for function "Adaption" and confirm entry with Q key.

-> Indicated on display:

```
Adaption
Feed in channel number XX
```

- Press key 0 twice for "Channel number 0" and confirm entry with Q key.

-> Indicated on display:

```
Adaption     Q
Erase learnt values?
```

- Confirm input with Q key.

satelettronica
Protected by copyright. Copying for private or commercial purposes, in part or in whole is not permitted unless authorised by Volkswagen AG. Volkswagen AG does not guarantee or accept any liability with respect to the correctness of information in this document. Copyright by Volkswagen AG.

-> Indicated on display:

```
Adaption
Learnt values have been erased
```

- Press the ⇒key.

-> Indicated on display:

```
Rapid data transfer      HELP
Select function XXX
```

- Press keys 0 and 4 for the function "Introduction of basic setting" and confirm entry with Q key.

-> Indicated on display:

```
Basic setting
Input display group number XXX
```

- Press keys 0, 6 and 0 for the "Display group number 60" and confirm entry with Q key.

-> Indicated on display:
(1...4 = display zones)

```
System in basic setting      60
     xxx.x %     xxx.x %     x     ADP.
runs
```

After pressing the Q key the throttle valve positioner is switched so that it is not supplied with voltage at start of test.

In this condition the throttle valve is pulled into an emergency running position by a mechanical spring in the throttle valve control part. The values that both angle senders provide in the emergency running position are stored by the engine control unit.

Thereafter the throttle valve is opened a predetermined value. If this value is achieved, the throttle valve is again switched so that it is not supplied with voltage. Now the mechanical spring must pull the throttle valve to the previously learnt emergency running position within a predetermined period (spring test).

Then the throttle valve is closed by the throttle valve positioner and the values, which are supplied by the angle senders in the throttle valve control part are stored by the engine control unit.

If the engine control unit switches the throttle valve positioner so that it is without voltage during normal operation, this is indicated by the increased and hunting idling speed. The engine reacts slowly to accelerator changes.

-> Indicated on display:
(1...4 = display zones)

```
System in basic setting      60
     xx.x %     xx.x %     0     ADP. OK
```

Adapting has been performed successfully.

- End basic setting of throttle valve control part by pressing⇒ key.

-> Indicated on display:

```
Rapid data transfer      HELP
Select function XXX
```

- Press keys 0 and 4 for the function "Initiating basic setting" and confirm entry with Q key.

-> Indicated on display:

```
Basic setting
Input display group number XXX
```

- Press keys 0, 7 and 4 for the "Display group number 74" and confirm entry with Q key.

Copyright by Volkswagen AG. Volkswagen AG does not guarantee or accept any liability with respect to the correctness of information in this document. Copying for private or commercial purposes, in part or in whole, is not permitted unless authorised by Volkswagen AG.
satelettronica

-> Indicated on display:
(1...4 = display zones)

```
Basic setting      74
     xx.x %     xx.x %     xx.x %     ADP.
runs
```

Adapting will be performed.

-> Indicated on display:
(1...4 = display zones)

```
Basic setting      74
     xx.x %     xx.x %     xx.x %     ADP.
runs
```

Adapting has been performed successfully.

- End the engine basic setting by pressing the⇒ key.
- Press keys 0 and 6 for the function "End output" and confirm entry with the Q key.

To store the values:

- Switch off ignition and wait for control unit run-on to end (approx. 25 seconds).

Note:

If the basic setting of the control unit is interrupted, the cause could be one of the following:

- The test conditions are not met.
- Throttle valve cannot reach the mechanical stop because of contamination e.g. oil deposits.
- Throttle valve control part or wiring is defective => Page 108 Checking throttle valve control part.
- Exhaust gas recirculation valve or wiring is defective. Check exhaust gas recirculation valve =>Page 25 , Final control diagnosis.

After an interruption a fault is stored in fault memory. When next switching on ignition the basic setting is automatically performed again.

5 - Checking additional signals

5.1 - Checking additional signals

5.2 - Checking speed signal

Special tools, workshop equipment, testers, measuring instruments and auxiliary items required

- Hand multimeter V.A.G 1526 or multimeter V.A.G 1715
- Fault reader V.A.G 1551 (or vehicle system tester V.A.G 1552) with cable V.A.G 1551/3
- Adapter set V.A.G 1594
- Test box V.A.G 1598/31
- Current flow diagram

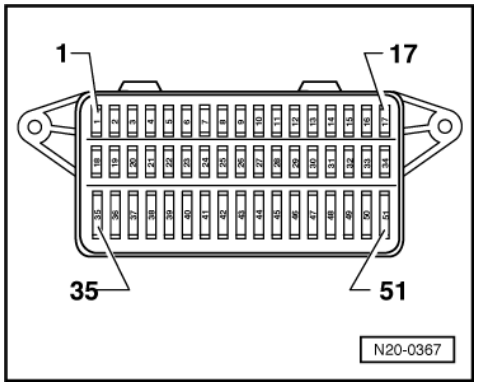

Protected by copyright. Copyright by Volkswagen AG. Volkswagen AG does not guarantee or accept any liability with respect to the correctness of information in this document. Copyright by Volkswagen AG. Reproduction in whole, is not permitted unless authorised by Volkswagen AG. Volkswagen AG does not guarantee or accept any liability with respect to the correctness of information in this document. Copyright by Volkswagen AG.
satelettronica

Check conditions

- -> Fuses 13 and 36 must be OK.
- The battery voltage must be at least 11.5 V.
- Earth connection in plenum chamber OK.
- All electrical consumers, e.g. lights and rear window heating must be switched off.
- If the vehicle is equipped with an air conditioning system, this must be switched off.
- No faults must be stored in fault memory => Page 10 , interrogating and erasing fault memory.
- Speedometer must be OK., checking speedometer:

=> Electrical system; Repair group 90

Test sequence

Note:

To check the speed signal the vehicle must be driven. To do this a second person is necessary.

Warning! Secure fault reader to rear seat and operate from this position.

Observe the valid safety precautions when carrying out a road test => Page 93 .

- Connect fault reader V.A.G 1551 (V.A.G 1552). Start engine and select "Address word" 01 of engine control unit. When doing this the engine must be running at idling speed.
  (Connecting fault reader and selecting engine control unit => Page 4 .)

-> Indicated on display:

```
Rapid data transfer      HELP
Select function XXX
```

- Press keys 0 and 8 for the function "Read measured value block" and confirm entry with Q key.

-> Indicated on display:

```
Read measured value block
Input display group number XXX
```

- Press keys 0, 0 and 5 for "Display group number 5" and confirm entry with Q key.

-> Indicated on display:
(1...4 = Display zones)

```
Read measured value block 5
     1      2      3      4
```

- Carry out test drive with a 2nd person to observe display.
- Observe figure displayed in display zone 3:
  Specification: approx. driven speed
- Drive slower. The displayed value must
  decrease.
- Press the ⇒key.
- Press keys 0 and 6 for the "End output" function and confirm input with the Q key.
- Switch off ignition.

If no speed is indicated or the display values reduce when driving slowly:

- Remove left cover for plenum chamber.

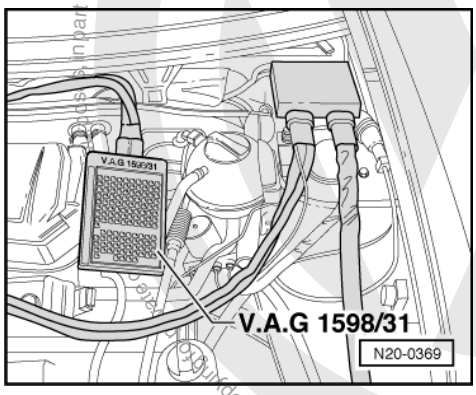

Protected by copyright. Copyright by Volkswagen AG.
Copyright by Volkswagen AG. Volkswagen AG does not guarantee or accept any liability with respect to the correctness of information in this document.
satelettronica

- -> Connect test box V.A.G 1598/31 to control unit wiring harness. The engine control unit remains disconnected.
- Connect multimeter for voltage measurement between test box sockets 3 (positive) + 9 (speed signal).
- Raise front left side of vehicle.
- Switch on ignition.
- Rotate front wheel and observe voltage display.
  Specification: 0.0...at least 4.0 Volt fluctuating

Note:

If necessary, hold the front right wheel to prevent it from turning.

If the display does not fluctuate:

- Check wiring from test box socket 9 to dash panel insert for open or short circuit referring to current flow diagram:

=> Current flow diagrams, Electrical fault finding and Fitting locations

5.3 - Checking engine speed signal

Function

The engine rpm signal output is on contact 22 of engine control unit. Amongst other things the signal is necessary for the rev. counter in dash panel insert.

Special tools, workshop equipment, testers, measuring instruments and auxiliary items required

- Hand multimeter V.A.G 1526 or multimeter V.A.G 1715
- Adapter set V.A.G 1594
- Test box V.A.G 1598/31
- Current flow diagram

Test conditions

- No faults must be stored in fault memory => Page 10 , interrogating and erasing fault memory.

Test sequence

- Remove left cover for plenum chamber.

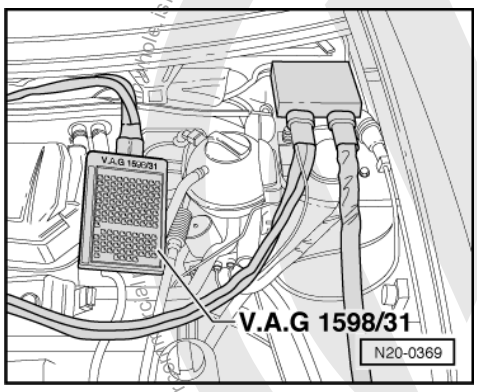

- -> Connect test box V.A.G 1598/31 to control unit wiring harness. The engine control unit remains disconnected.
- Check wiring from test box contact 22 to dash panel insert for open circuit referring to current flow diagram:

=> Current flow diagrams, Electrical fault finding and Fitting locations

Copyright by Volkswagen AG. Volkswagen AG does not guarantee or accept any liability with respect to the correctness of information in this document. Copyright by Volkswagen AG.
Protected by copyright. Copying for private or commercial purposes, in part or in whole, is not permitted unless authorised by Volkswagen AG.
satelettronica

5.4 - Checking signal from/to air conditioning system

Function

Air conditioner compressor signal:
Just before the air conditioner compressor is switched on, the voltage is sent to the engine control unit. The signal ensures that once the air conditioner is switched on, idling speed will not drop drastically.

Switching off air conditioner compressor:
In order that engine performance is not impaired when accelerating, the A/C compressor is switched off briefly when accelerating from start or from low engine revs.

Air conditioner readiness:
When the air conditioner is switched on the engine control unit receives the information: air conditioning system is switched on. This "PWM signal" (pulse width modulation) can be used to pre-control the idling speed.

Special tools, workshop equipment, testers, measuring instruments and auxiliary items required

- Hand multimeter V.A.G 1526 or multimeter V.A.G 1715
- Fault reader V.A.G 1551 (or vehicle system tester V.A.G 1552) with cable V.A.G 1551/3
- Adapter set V.A.G 1594
- Test box V.A.G 1598/31
- Current flow diagram

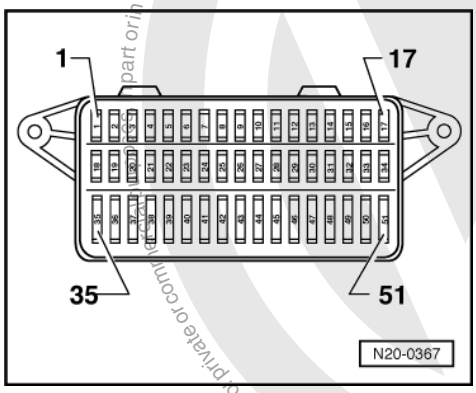

Test conditions

- -> Fuses 13 and 36 must be OK.
- The battery voltage must be at least 11.5 V.
- Earth connection in plenum chamber OK.
- All electrical consumers, e.g. lights and rear window heating must be switched off.
- Air conditioner functioning OK.
- Air conditioner must be switched off
- Vehicle at room temperature (warmer than + 15 °C).
- No faults must be stored in fault memory => Page 10 , interrogating and erasing fault memory.

Test sequence

- Connect fault reader V.A.G 1551 (V.A.G 1552). Start engine and select "Address word" 01 of engine control unit. When doing this the engine must be running at idling speed.
  (Connecting fault reader and selecting engine control unit => Page 4 .)

-> Indicated on display:

```
Rapid data transfer      HELP
Select function XXX
```

- Press keys 0 and 8 for the function "Read measured value block" and confirm entry with Q key.

-> Indicated on display:

satelettronica

```
Read measured value block
Input display group number XXX
```

Checking air conditioner compressor signal and air conditioner switch-off

- Press keys 0, 5 and 0 for "Display group number 50" and confirm entry with Q key.

-> Indicated on display:
(1...4 = Display zones)

```
Read measured value block 50
     1      2      3      4
```

- Check displays in display zones 3 and 4:

  Display in display zone 3:
  Off
  Display in display zone 4:
  Compr.OFF

- Switch on air conditioning system.
- Select lowest temperature and highest blower speed.

  The display in display zone 3 must change to
  on.
  Display in display zone 4 must change to
  Compr.ON.

- Carry out test drive with a 2nd person to observe display.

Observe the valid safety precautions when carrying out a road test => Page 93 .

Note:
A road test is required to test the shut-off function.

- Engage 1st gear and accelerate moderately hard. Then release accelerator pedal.

  The display in display zone 4 must change from
  Compr.ON
  to
  Compr. OFF
  for a few seconds (compressor switch-off when vehicle is accelerating), during which the display in display zone 3 must remain constantly at "on".

- Press the ⇒key.
- Switch off air conditioning system.

If the display changes as described:

- Checking air conditioner readiness => Page 155 .

If the displays do not change as described:

- Press keys 0 and 6 for the "End output" function and confirm input with the Q key.
- Switch off ignition.
- Remove left cover for plenum chamber.

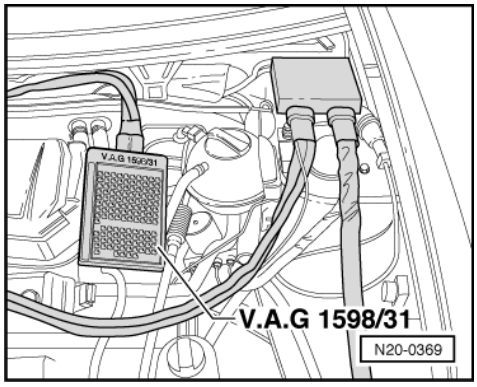

Protected by copyright. Copying for private or commercial purposes, in part or in whole, is not permitted unless authorised by Volkswagen AG. Volkswagen AG does not guarantee or accept any liability with respect to the correctness of information in this document. Copyright by Volkswagen AG.
satelettronica

- -> Connect test box V.A.G 1598/31 to control unit wiring harness. The engine control unit remains disconnected.
- Check wiring between test box sockets 76 and the air conditioner for open circuit using current flow diagram.
  Wire resistance: Max. 1.5 ω
- Check the wire between text box socket 28 and the air conditioner for open circuit using current flow diagram.
  Wire resistance: Max. 1.5 ω

Checking air conditioner readiness

Note:

The engine control unit receives a "PWM signal" from air conditioning system high pressure sender (G65), this allows the idling speed signal to be regulated more precisely.

- Press keys 0 and 8 for the function "Read measured value block" and confirm entry with Q key.

-> Indicated on display:

```
Read measured value block
Input display group number XXX
```

- Press keys 0, 5 and 7 for "Display group number 57" and confirm entry with Q key.

-> Indicated on display:
(1...4 = Display zones)

```
Read measured value block 57
     1     2     3     4
```

- Observe display in display zone 4. It must show
  0...2 %
- Switch on air conditioning system.
- Select lowest temperature and highest blower speed.

  The display in display zone must change to
  15...80% (fluctuating).

- Press the ⇒key.
- Press keys 0 and 6 for the "End output" function and confirm input with the Q key.

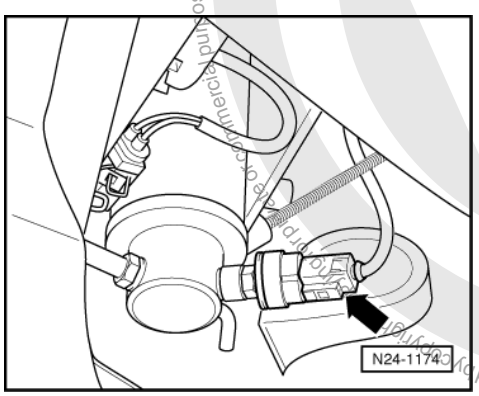

- Switch off ignition.

If the display does not change or the value remains constant:

- -> Pull 3-pin connector off air conditioning system high pressure switch (G65) -arrow-.

satelettronica
Protected by copyright. Copying for private or commercial purposes, in whole or in part, is not permitted unless authorised by Volkswagen AG. Volkswagen AG does not guarantee or accept any liability with respect to the correctness of information in this document. Copyright by Volkswagen AG.

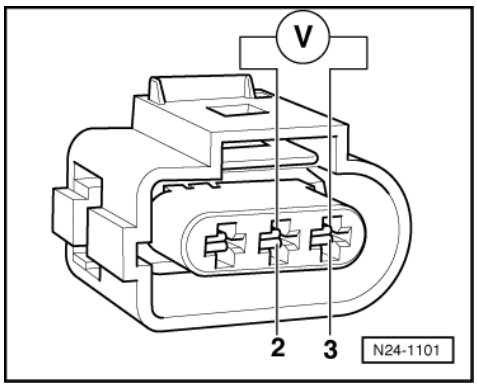

- -> Connect multimeter to measure voltage using aux. cables from V.A.G 1594 to contacts 2 (positive) and 3 (earth) on high pressure sender connector.
- Switch on ignition.
  Specification: min. 11.5 V
- Switch off ignition.

If no voltage is present:

- Remove left cover for plenum chamber.

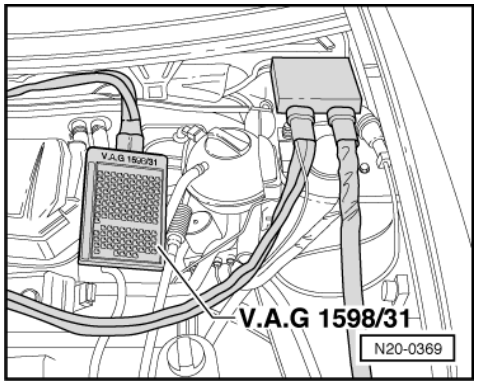

- -> Connect test box V.A.G 1598/31 to control unit wiring harness. The engine control unit remains disconnected.

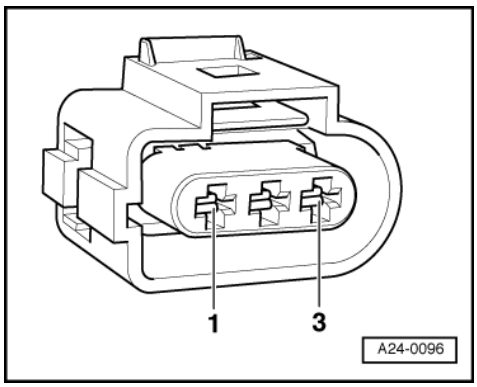

- -> Check wiring for open circuit between test box and 3-pin connector referring to current flow diagram:
  Contact 2 and test box socket 29
  Wire resistance: max. 1.5 ω
- Check wiring additionally for short to vehicle earth or battery positive.
  Specification: ∞ω

If no wiring fault is detected:

- Renew high pressure sender (G65)

Protected by copyright. Copying for private or commercial purposes, in part or in whole, is not permitted unless authorised by Volkswagen AG. Volkswagen AG does not guarantee or accept any liability with respect to the correctness of information in this document. Copyright by Volkswagen AG.
satelettronica

=> Heating, Air conditioning; Repair group 87

- Interrogate fault memory, if necessary, repair any faults and then erase fault memory => Page 10 , interrogating and erasing fault memory.

5.5 - Checking signal from clutch pedal switch

Special tools, workshop equipment, testers, measuring instruments and auxiliary items required

- Hand multimeter V.A.G 1526 or multimeter V.A.G 1715
- Fault reader V.A.G 1551 (or vehicle system tester V.A.G 1552) with cable V.A.G 1551/3
- Adapter set V.A.G 1594
- Test box V.A.G 1598/31
- Current flow diagram

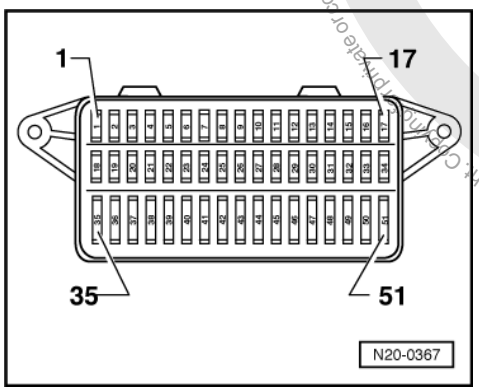

Test conditions

- -> Fuses 24, 31 and 36 must be OK.
- The battery voltage must be at least 11.5 V.
- Earth connection in plenum chamber OK.
- All electrical consumers, e.g. lights and rear window heating must be switched off.
- If the vehicle is equipped with an air conditioning system, this must be switched off.

Test sequence

- Connect the fault reader V.A.G 1551 (V.A.G 1552). Then switch ignition on and select engine control unit with the "Address word" 01.
  (Connecting fault reader and selecting engine control unit => Page 4 .)

-> Indicated on display:

```
Rapid data transfer      HELP
Select function XXX
```

- Press keys 0 and 8 for the function "Read measured value block" and confirm entry with Q key.

-> Indicated on display:

```
Read measured value block
Input display group number XXX
```

- Press keys 0, 6 and 6 for "display group 66" and confirm with Q key.

-> Indicated on display:
(1...4 = Display zones)

```
Read measured value block 66
     1     2     3     4
```

Protected by copyright. Copyright by Volkswagen AG.
Copyright by Volkswagen AG. Volkswagen AG does not guarantee or accept any liability with respect to the correctness of information in this document.
Reproduction, in whole or in part or in any other form or by any means, is not permitted unless authorised by Volkswagen AG.
satelettronica

- Check operating condition of clutch pedal switch (F36) in display zone 2.

  2nd position from left must display 0
  Display: x0xx
  Significance of figures in 4 digit number block
  => Page 67 .

- Fully depress clutch pedal.
- Check operating condition of clutch pedal switch (F36) in display zone 2.

  2nd position from left must display 1
  Display: x1xx

- Press the ⇒key.
- Press keys 0 and 6 for the "End output" function and confirm input with the Q key.
- Switch off ignition.

If the display does not change as described:

- Remove cover in footwell (driver's side).

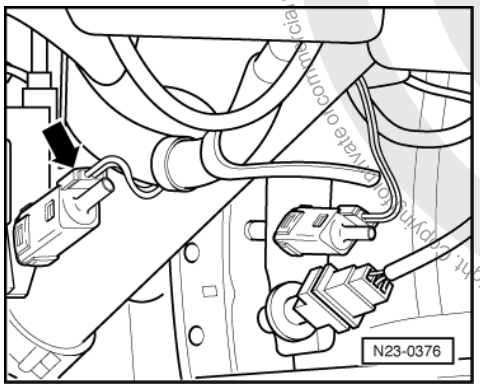

- Pull 2-pin connector off clutch pedal switch (F36) -arrow-.

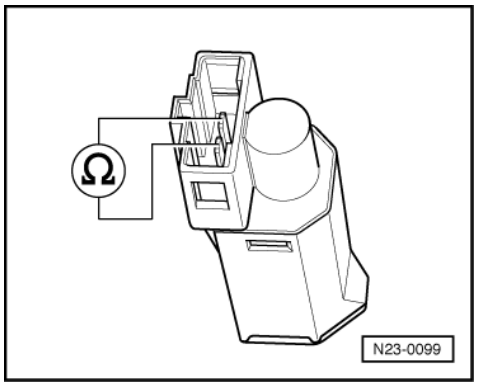

- -> Connect multimeter to measure resistance at contacts of clutch pedal switch.
  Specification:
  Clutch pedal not depressed: max. 1.5 ω
  Clutch pedal depressed: ∞ω(open circuit)

If the specifications are not obtained:

- Replace clutch pedal switch (F36).
- Adjust contact point of clutch pedal switch.
- Interrogate fault memory, if necessary, repair any faults and then erase fault memory => Page 10 , interrogating and erasing fault memory.

If the specifications are obtained:

Protected by copyright. Copyright by Volkswagen AG. Volkswagen AG does not guarantee or accept any liability with respect to the correctness of information in this document. Copyright by Volkswagen AG. Copying for private or commercial purposes, in part or in whole, is not permitted unless authorised by Volkswagen AG.
satelettronica

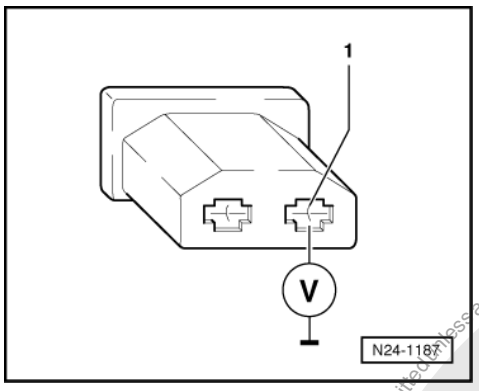

- -> Connect multimeter to measure voltage with aux. cables from V.A.G 1594 to contact 1 (positive) of clutch pedal connector and earth.
- Switch on ignition.
  Specification: min. 11.5 V
- Switch off ignition.

If the specification is not attained:

- Check wire for open circuit between 2-pin connector contact 1 and fuse holder referring to current flow diagram.
  Wire resistance: max. 1.5 ω

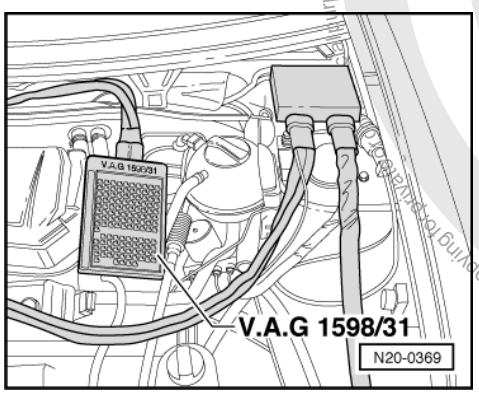

If the specification is obtained:

- Remove left cover for plenum chamber.
- -> Connect test box V.A.G 1598/31 to control unit wiring harness. The engine control unit remains disconnected.

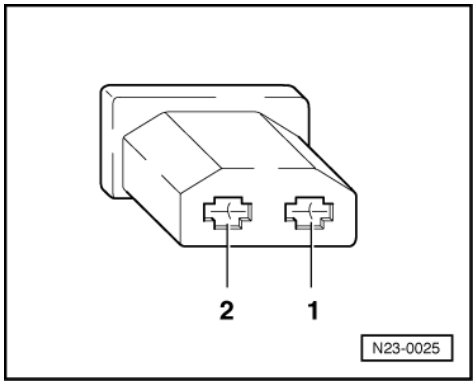

- -> Check wire between test box and 2-pin connector referring to current flow diagram.
  Contact 2 and test box socket 65
  Wire resistance: max. 1.5 ω
- Additionally check wires for short to one another, to vehicle earth and to battery positive.

Protected by copyright. Copying for private or commercial purposes, in part or in whole, is not permitted unless authorised by Volkswagen AG. Volkswagen AG does not guarantee or accept any liability with respect to the correctness of information in this document. Copyright by Volkswagen AG.
satelettronica

Specification: ∞ω

If no fault is detected in the wiring:

- Replace engine control unit
  => Page 145 .

5.6 - Checking signal from brake light switch and brake pedal switch

Special tools, workshop equipment, testers, measuring instruments and auxiliary items required

- Hand multimeter V.A.G 1526 or multimeter V.A.G 1715
- Fault reader V.A.G 1551 (or vehicle system tester V.A.G 1552) with cable V.A.G 1551/3
- Adapter set V.A.G 1594
- Test box V.A.G 1598/31
- Current flow diagram

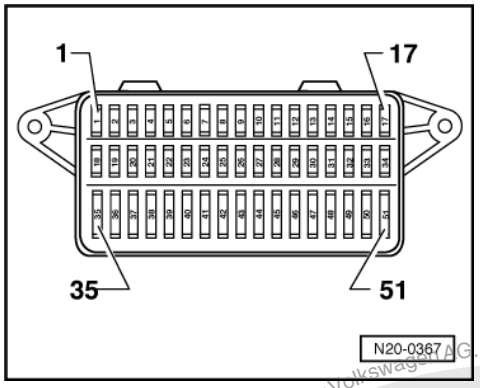

Test conditions

- -> Fuses 15, 24, 31 and 36 must be OK.
- The battery voltage must be at least 11.5 V.
- Earth connection in plenum chamber OK.
- All electrical consumers, e.g. lights and rear window heating must be switched off.
- If the vehicle is equipped with an air conditioning system, this must be switched off.

Test sequence

- Connect the fault reader V.A.G 1551 (V.A.G 1552). Then switch ignition on and select engine control unit with the "Address word" 01.
  (Connecting fault reader and selecting engine control unit => Page 4 .)

-> Indicated on display:

```
Rapid data transfer      HELP
Select function XXX
```

- Press keys 0 and 8 for the function "Read measured value block" and confirm entry with Q key.

-> Indicated on display:

```
Read measured value block
Input display group number XXX
```

- Press keys 0, 6 and 6 for "display group 66" and confirm with Q key.

-> Indicated on display:
(1...4 = Display zones)

Protected by copyright. Copying for private or commercial purposes, in part or in whole, is not permitted unless authorised by Volkswagen AG. Volkswagen AG does not guarantee or accept any liability with respect to the correctness of information in this document. Copyright by Volkswagen AG.
satelettronica

```
Read measured value block 66
     1     2     3     4
```

- Check operating condition of brake pedal switch (F47) and brake light switch (F) in display zone 2:

  3rd and 4th position from left must display 0
  Display: xx00
  Significance of figures in 4 digit number block
  => Page 67 .

- Depress brake pedal.
- Check operating condition of brake pedal switch (F47) and brake light switch (F) in display zone 2:

  3rd and 4th position from left must display 1
  Display: xx11

- Press the ⇒key.
- Press keys 0 and 6 for the "End output" function and confirm input with the Q key.
- Switch off ignition.

If the display does not change as described:

- Remove cover in footwell (driver's side).
- Check switches and wiring to switches as follows:

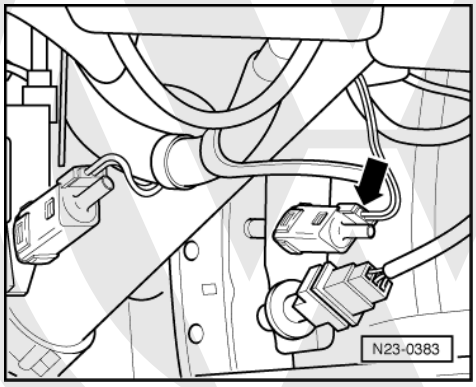

Checking brake pedal switch (F47)

- Pull 2-pin connector off brake pedal switch -arrow-.

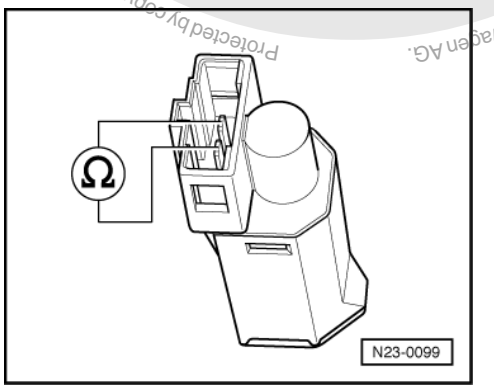

- -> Connect multimeter for resistance measurement to contacts of brake pedal switch.
  Specification
  Brake pedal not depressed: max. 1.5 ω
  Brake pedal depressed: ∞ω(no continuity)

Protected by copyright. Copyright by Volkswagen AG. Volkswagen AG does not guarantee or accept any liability with respect to the correctness of information in this document. Copyright by Volkswagen AG. Protected by copyright. Copying for private or commercial purposes, in part or in whole, is not permitted unless authorised by Volkswagen AG.
satelettronica

If the specifications are not obtained:
- Replace the brake pedal switch(F47).
- Adjust contact point of brake pedal switch.
- Interrogate fault memory, if necessary, repair any faults and then erase fault memory => Page 10 , interrogating and erasing fault memory.

If the specifications are obtained:

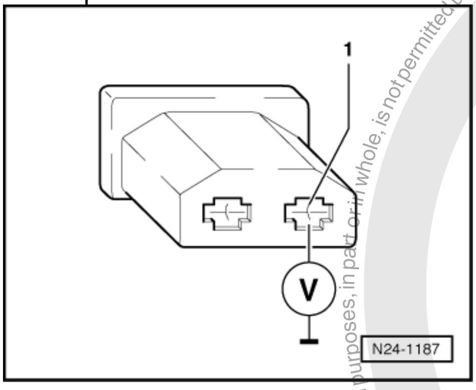

- -> Connect multimeter for voltage measurement using adapter leads from V.A.G 1594 to contacts 1 (positive) of brake pedal switch connector and earth.
- Switch on ignition.
  Specification: min. 11.5 V
- Switch off ignition.

If the specification is not attained:
- Check wire for open circuit between 2-pin connector contact 1 and fuse holder referring to current flow diagram.
  Wire resistance: max. 1.5 ω

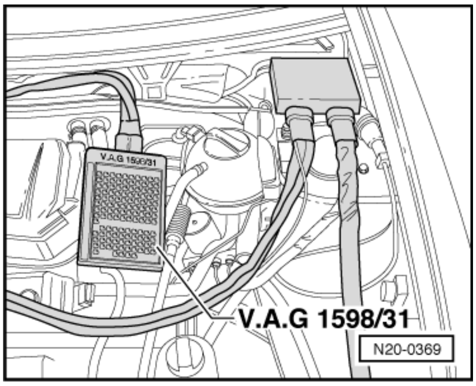

If the specification is obtained:
- Remove left cover for plenum chamber.
- -> Connect test box V.A.G 1598/31 to control unit wiring harness. The engine control unit remains disconnected.

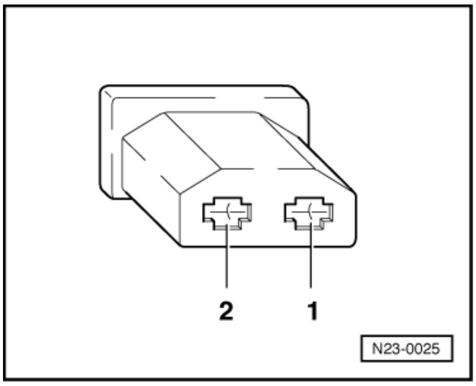

Protected by copyright. Copying for private or commercial purposes, in part or in whole, is not permitted unless authorised by Volkswagen AG. Volkswagen AG does not guarantee or accept any liability with respect to the correctness of information in this document. Copyright by Volkswagen AG.

satelettronica

- -> Check wire between test box and 2-pin connector for open circuit using current flow diagram.
  Contact 2 and test box socket 63
  Wire resistance: max. 1.5 ω
- Additionally check wires for short to one another, to vehicle earth and to battery positive.
  Specification: ∞ω

If no fault is detected in the wiring:

- Replace engine control unit
  => Page 145 .

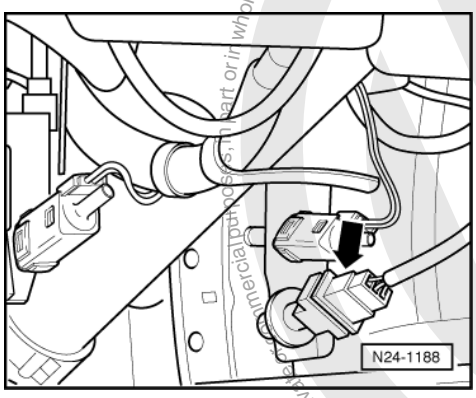

Checking brake light switch (F)

- -> Pull 3-pin connector off brake light switch -arrow-.

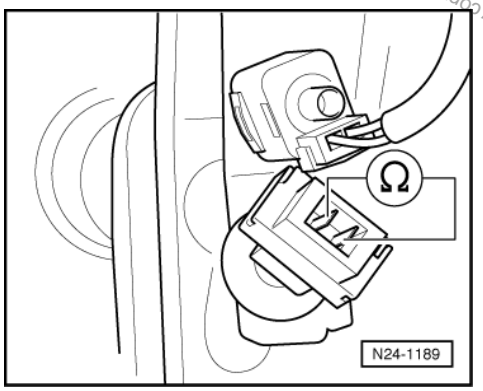

- -> Connect multimeter for resistance measurement to contacts of brake light switch.
  Specification
  Brake pedal not depressed: ∞ω(no continuity)
  Brake pedal depressed: max. 1.5ω

If the specifications are not obtained:

- Replace brake light switch (F).
- Adjust contact point of brake pedal switch.
- Interrogate fault memory, if necessary, repair any faults and then erase fault memory => Page 10 , interrogating and erasing fault memory.

If the specifications are obtained:

Protected by copyright. Copyright by Volkswagen AG. Volkswagen AG does not guarantee or accept any liability with respect to the correctness of information in this document. Copyright by Volkswagen AG. Commercial use or distribution of the data is not permitted unless authorised by Volkswagen AG.
satelettronica

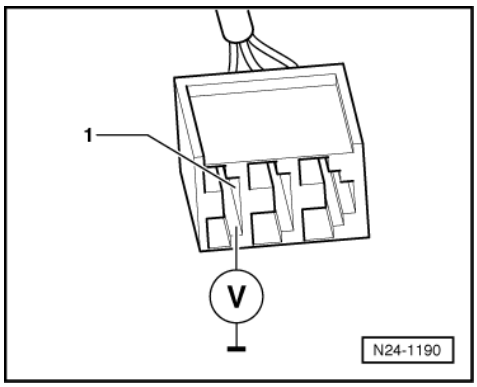

- -> Connect multimeter for voltage measurement using adapter leads from V.A.G 1594 to contacts 1 (positive) of brake pedal switch connector and earth.
  Specification: at least 11.5 V

If the specification is not attained:

- Check wire for open circuit between 3-pin connector contact 1 and fuse holder using current flow diagram.
  Wire resistance: max. 1.5 ω

If the specification is obtained:

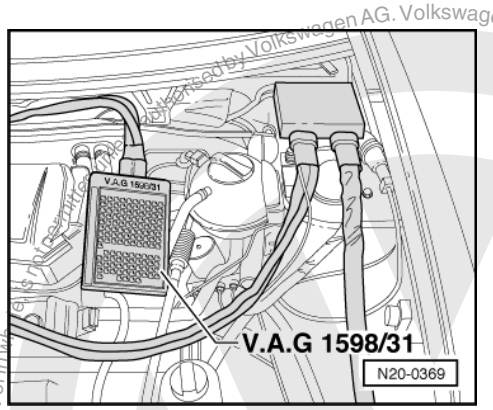

- Remove left cover for plenum chamber.
- -> Connect test box V.A.G 1598/31 to control unit wiring harness. The engine control unit remains disconnected.

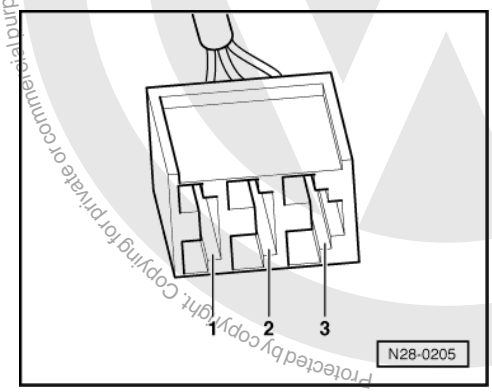

- -> Check wire for open circuit between test box and 2-pin connector using current flow diagram.
  Contact 3 and test box socket 53
  Wire resistance: max. 1.5 ω
- Additionally check wires for short to one another, to vehicle earth and to battery positive.
  Specification: ∞ω

If no fault is detected in the wiring:

Protected by copyright. Copying for private or commercial purposes, in part or in whole, is not permitted unless authorised by Volkswagen AG. Volkswagen AG does not guarantee or accept any liability with respect to the correctness of information in this document. Copyright by Volkswagen AG.
satelettronica

- Replace engine control unit
  => Page 145 .

5.7 - Checking signal from power steering pressure switch

Special tools, workshop equipment, testers, measuring instruments and auxiliary items required

- Hand multimeter V.A.G 1526 or multimeter V.A.G 1715
- Fault reader V.A.G 1551 (or vehicle system tester V.A.G 1552) with cable V.A.G 1551/3
- Adapter set V.A.G 1594
- Test box V.A.G 1598/31
- Current flow diagram

Test conditions

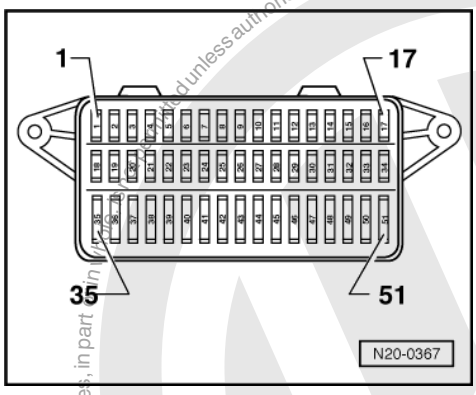

- -> Fuses 13 and 36 must be OK.
- The battery voltage must be at least 11.5 V.
- Earth connection in plenum chamber OK.
- All electrical consumers, e.g. lights and rear window heating must be switched off.
- If the vehicle is equipped with an air conditioning system, this must be switched off.

Test sequence

- Connect fault reader V.A.G 1551 (V.A.G 1552). Start engine and select "Address word" 01 of engine control unit. When doing this the engine must be running at idling speed.
  (Connecting fault reader and selecting engine control unit => Page 4 .)

-> Indicated on display:

```
Rapid data transfer        HELP
Select function XXX
```

- Press keys 0 and 8 for the function "Read measured value block" and confirm entry with Q key.

-> Indicated on display:

```
Read measured value block
Input display group number XXX
```

- Press keys 0, 5 and 5 for "Display group number 55" and confirm entry with Q key.

-> Indicated on display:
(1...4 = Display zones)

```
Read measured value block 55
     1     2     3     4
```

- Check operating mode of power assisted steering pressure switch (F88) in display zone 4:

  1st position from left must display 0
  Display: 0xxxx
  Sigificance of figures in 5 digit number block

Protected by copyright. Copying for private or commercial purposes, in part or in whole, is not permitted unless authorised by Volkswagen AG. Volkswagen AG does not guarantee or accept any liability with respect to the correctness of information in this document. Copyright by Volkswagen AG.
satelettronica

=> Seite 64 .

- Turn the steering wheel to full lock.
- Check operating mode of power assisted steering pressure switch (F88) in display zone 4:

  1st position from left must display 1
  Display: 1xxxx

- Press the ⇒key.
- Press keys 0 and 6 for the "End output" function and confirm input with the Q key.
- Switch off ignition.

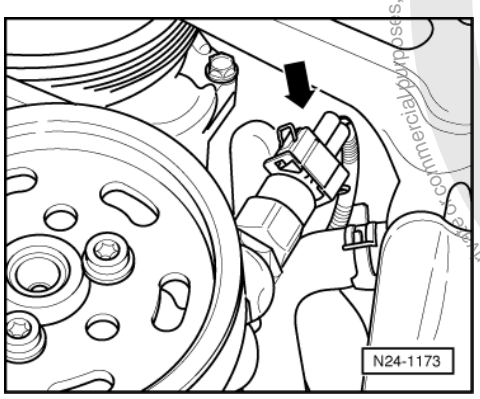

If the display does not change as described:

- -> Pull 2-pin connector off power assisted steering pressure switch (F88) -arrow-.
- Connect multimeter to measure resistance at contacts of power assisted steering pressure switch.
- Start engine and run at idling speed.
  Specification: ∞ω (no continuity)
- Turn the steering wheel to full lock.
  Specification: max 1.5 ω
- Switch off ignition.

If the specifications are not obtained:

- Renew power assisted steering pressure switch (F88):

=> Running gear, Axles, Steering; Repair group 48; Vane pump, reservoir, hydraulic pipes Vane pump, reservoir, hydraulic pipes

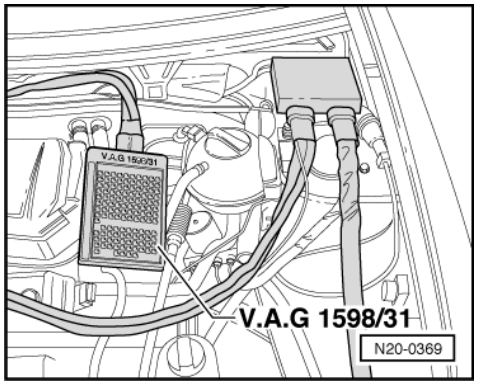

- Interrogate fault memory, if necessary, repair any faults and then erase fault memory => Page 10 , interrogating and erasing fault memory.

If no fault in pressure switch is detected:

- Remove left cover for plenum chamber.

Protected by copyright. Copyright by Volkswagen AG. Volkswagen AG does not guarantee or accept any liability with respect to the correctness of information in this document. Copyright by Volkswagen AG. Copying for private or commercial purposes, in part or in whole, is not permitted unless authorised by Volkswagen AG.
satelettronica

- -> Connect test box V.A.G 1598/31 to control unit wiring harness. The engine control unit remains disconnected.

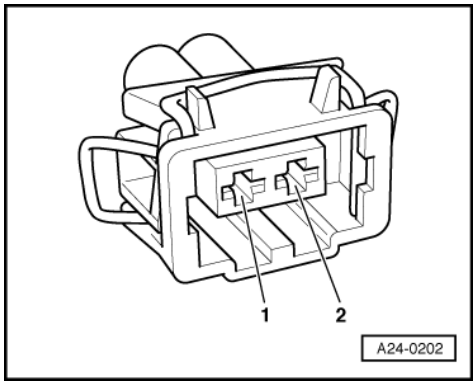

- -> Check wiring for open circuit between test box and 2-pin connector using current flow diagram:
  Contact 1 and test box socket 30
  Contact 2 and test box socket 49
  Wire resistance: max. 1.5 ω
- Additionally check wires for short to one another, to vehicle earth and to battery positive.
  Specification: ∞ω

If no fault is detected in the wiring:

- Replace engine control unit
  => Page 145 .

5.8 - Checking starter signal

Special tools, workshop equipment, testers, measuring instruments and auxiliary items required

- Hand multimeter V.A.G 1526 or multimeter V.A.G 1715
- Adapter set V.A.G 1594
- Test box V.A.G 1598/31
- Current flow diagram

Test conditions

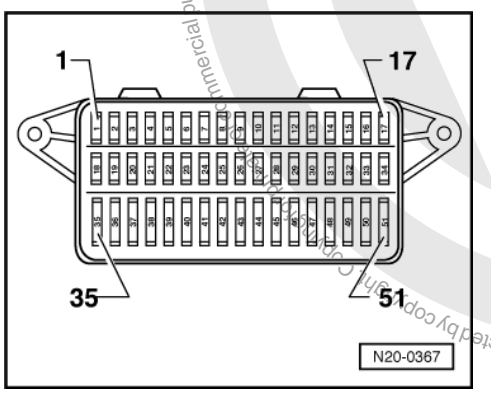

- -> Fuses 13 and 36 must be OK.
- The battery voltage must be at least 11.5 V.
- Earth connection in plenum chamber OK.
- All electrical consumers, e.g. lights and rear window heating must be switched off.
- If the vehicle is equipped with an air conditioning system, this must be switched off.

Protected by copyright. Copyright by Volkswagen AG. Volkswagen AG does not guarantee or accept any liability with respect to the correctness of information in this document. Copyright by Volkswagen AG.
satelettronica

Test sequence

- Remove left cover for plenum chamber.

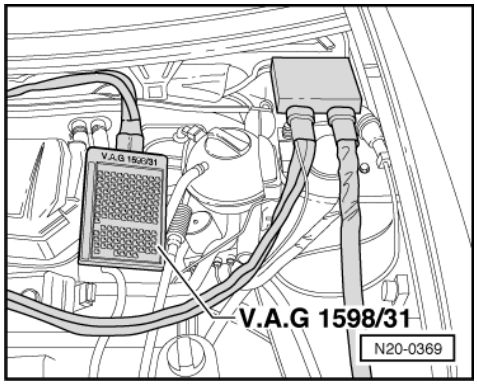

- -> Connect test box V.A.G 1598/31 to control unit wiring harness. The engine control unit remains disconnected.
- Connect multimeter to measure voltage between test box sockets 55 (positive) + earth.
- Get a 2nd person to operate the starter. Observe voltage display.
  Specification: at least 8.0 V

If the specification is not obtained:

- Check wiring connection from test box socket 55 to starter (terminal 50) for open and short circuit using current flow diagram:

=> Current flow diagrams, Electrical fault finding and Fitting locations

- Interrogate fault memory, if necessary, repair any faults and then erase fault memory => Page 10 , interrogating and erasing fault memory.

5.9 - Checking data bus

Function

Data bus-compatible control units are connected together via two data bus wires twisted together (CAN high and CAN low) and exchange information (messages). Information not available in the data bus will be recognised as a fault by the engine control unit as well as other CAN data bus control units.

The CAN data bus requires a matching resistor of 66ω to function fault free. This matching resistor is located in the engine control unit.

Further information:

=> Self study programme No. 186 "The CAN data bus".

Special tools, workshop equipment, testers, measuring instruments and auxiliary items required

- Hand multimeter V.A.G 1526 or multimeter V.A.G 1715
- Adapter set V.A.G 1594
- Test box V.A.G 1598/31
- Current flow diagram

Test conditions

- A fault has been recognised by the CAN data bus self-diagnosis.

Copyright by Volkswagen AG. Volkswagen AG does not guarantee or accept any liability with respect to the correctness of information in this document. Copying for private or commercial purposes, in part or in whole, is not permitted unless authorised by Volkswagen AG.
satelettronica

Test sequence

- Remove left cover for plenum chamber.
- Unlock the engine control unit connector and pull it off.
- Connect test box V.A.G 1598/31 to engine control unit. The control unit wiring harness is not connected by this action.
- Check centralized matching resistor in engine control unit.
- Measure resistance between
  Test box socket 39 and 40:
  Specification: 60.0...72.0 ω

If the resistance measurement is outside the specified range:

- Replace engine control unit
  => Page 145 .

If the resistance value is within the specified range:

- Pull test box V.A.G 1598/31 off engine control unit.

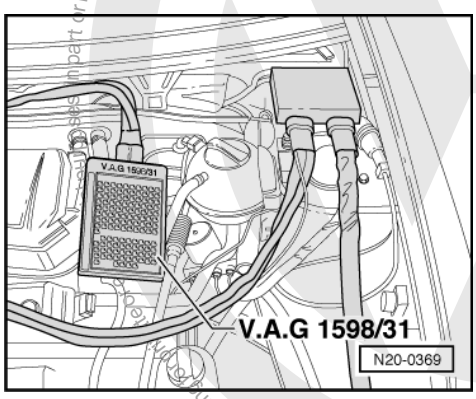

- -> Connect test box V.A.G 1598/31 to control unit wiring harness. The engine control unit remains disconnected.
- Check the CAN data bus wiring for short to one another:
- Pull wiring harness off all other control units/components which are networked via this data bus.

=> Current flow diagrams, Electrical fault finding and Fitting locations

- Then measure resistance again between:
  Test box sockets 39 and 40:
  Specification: ∞ ω

If the specification is not obtained (wires have short to one another):

- Repair the fault in the wiring using current flow diagram:

=> Current flow diagrams, Electrical fault finding and Fitting locations

If the specification is obtained (wires do not have a short to one another):

- Check wiring to the individual data bus components for open circuit, short to positive and earth using current flow diagram:

=> Current flow diagrams, Electrical fault finding and Fitting locations

satelettronica

28 - Ignition system

1 - Servicing ignition system

1.1 - Servicing ignition system

1.2 - General notes on ignition system

- Only the components which specifically relate to the ignition system are dealt with here. For the other components of the injection and ignition system => Repair group 24.
- Disconnecting and connecting the battery must only be done with the ignition switched off, otherwise the engine control unit could be damaged.
- The engine control unit is equipped with self diagnosis.
- Components marked with * are checked via the self diagnosis
  => Page 10 , interrogating and erasing fault memory.
- For trouble-free operation of the electrical components a voltage of at least 11.5 V is necessary.
- Before carrying out repairs and for fault finding, interrogate fault memory => Page 10 , interrogating and erasing fault memory
- During some checks it is possible that the control unit will recognise and store a fault. Therefore after completing all checks and repairs the fault memory must be interrogated and if necessary erased.
  => Page 10 , interrogating and erasing fault memory

- If the engine starts, runs for a short period and then stops after fault finding, repairs or component tests, then the fault may lie with the immobilizer which is blocking the engine control unit. The fault memory must be interrogated and if necessary the control unit matched:

=> Electrical system; Repair group 01; Immobilizer self-diagnosis; Adaption following renewal of engine control unit Immobilizer self-diagnosis Adaption following renewal of engine control unit

Safety precautions => Page 174

Test data, spark plugs => Page 175

satelettronica

1.3 - Removing and installing parts of ignition system

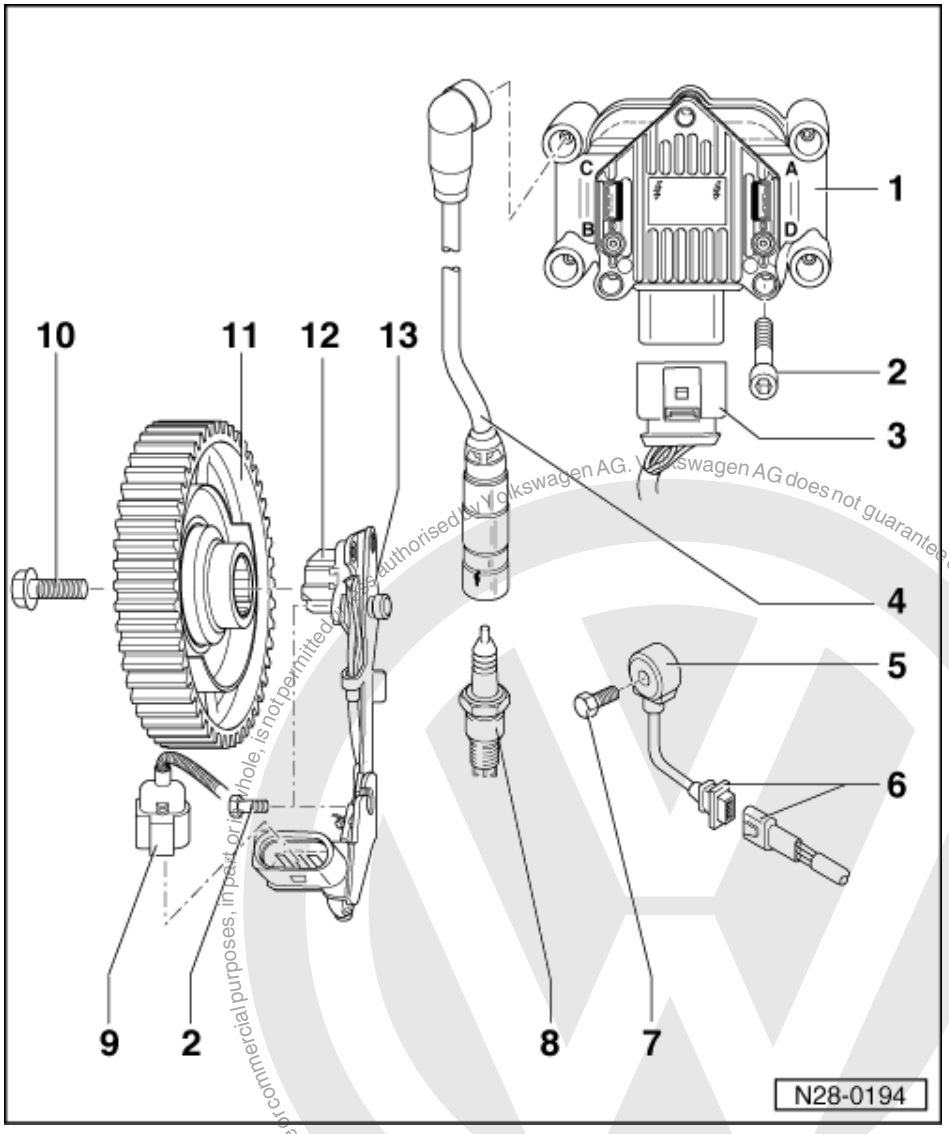

Note:

Engine control unit with connectors => Page 75 , item 17 .*

1 Ignition transformer (N152)
- Fitting location => Page 69 , engine compartment overview
- Marked for H.T. cables:
  A = Cylinder 1
  B = Cylinder 2
  C = Cylinder 3
  D = Cylinder 4
- With output stage (N122)
- Checking => Page 177

2 10 Nm

3 Connector
- Black, 4 pin
- For ignition transformer (N152)

Protected by copyright. Copying for private or commercial purposes, in part or in whole, is not permitted unless authorised by Volkswagen AG. Volkswagen AG does not guarantee or accept any liability with respect to the correctness of information in this document. Copyright by Volkswagen AG.
satelettronica

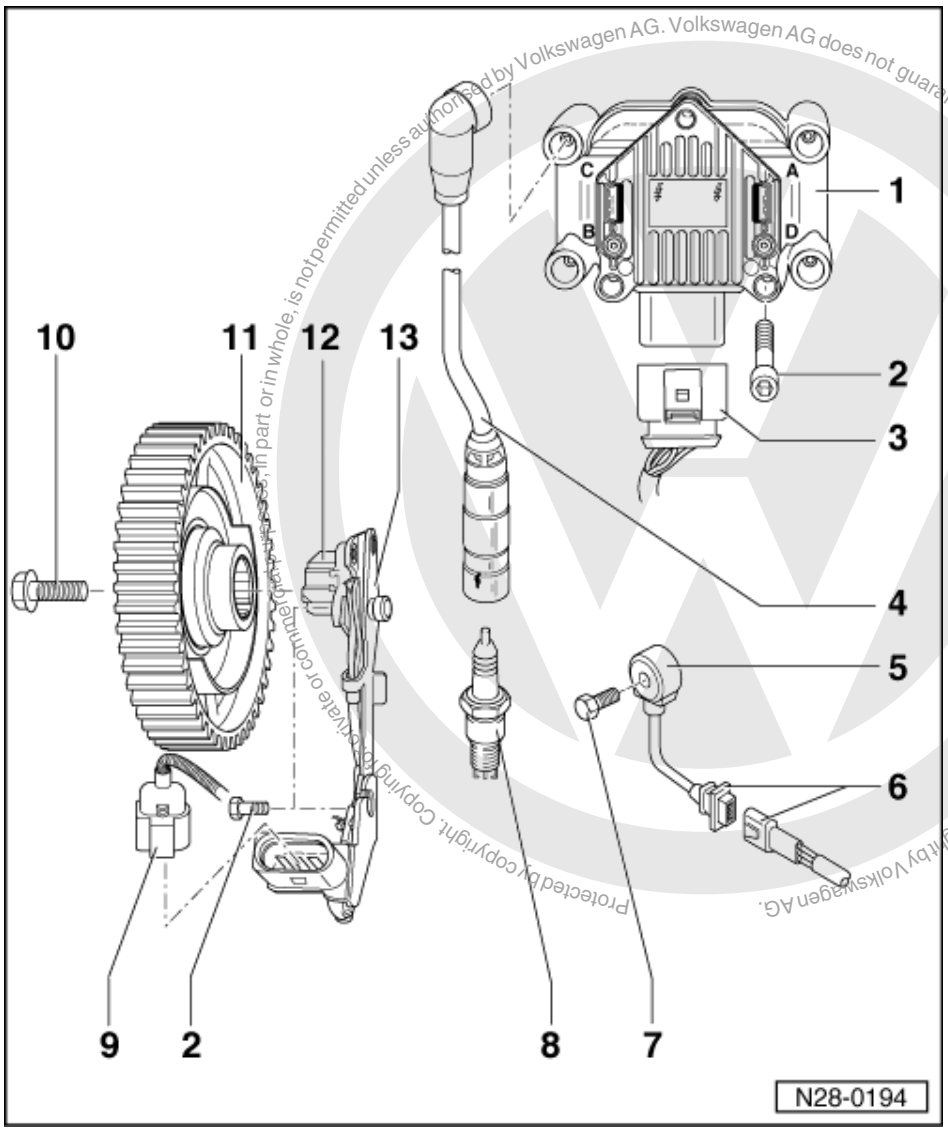

Protected by copyright. Copying for private or commercial purposes, in part or in whole, is not permitted unless authorised by Volkswagen AG. Volkswagen AG does not guarantee or accept any liability with respect to the correctness of information in this document. Copyright by Volkswagen AG.

satelettronica

4 H.T. cable
- Resistance 4.0...8.0 kω
- With suppression connector and spark plug connector
- Pull off spark plug connectors for cylinders 1 and 4 with assembly tool T10029
- Pull off spark plug connectors for cylinders 2 and 3 with spark plug connector pliers V.A.G 1922

5 Knock sensor 1 (G61)*
- Fitting location => Page 69 , engine compartment overview
- Checking => Page 181

6 3 pin connector
- Fitting location => Page 69 , engine compartment overview
- Black
- Contacts gold plated

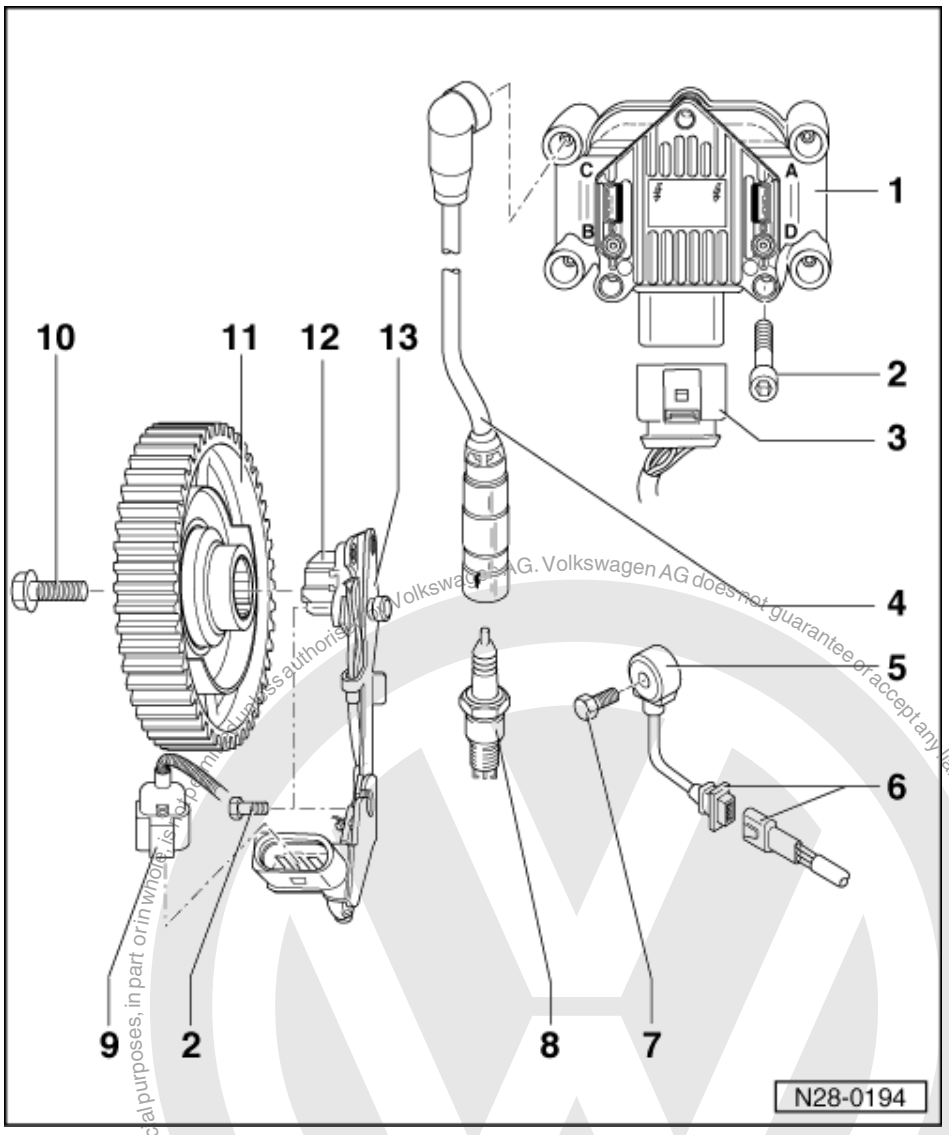

7 20 Nm
- Tightening torque influences the function of the knock sensor

8 Spark plug, 30 Nm
- Type and electrode gap
  => Page 175 , test data, spark plugs
- Remove and install with spark plug spanner 3122B

9 Connector
- Black, 3-pin
- For Hall sender (G40)
- Contacts gold plated

10 100 Nm
- Use counter-hold tool 3415 to loosen and tighten

11 Camshaft sprocket
- With rotor for Hall sender
- Removing and installing:

=> Repair group 15; Servicing valve gear Servicing valve gear

Protected by copyright. Copyright by Volkswagen AG.
Copyright by Volkswagen AG. Volkswagen AG does not guarantee or accept any liability with respect to the correctness of information in this document.
Reproduction for commercial purposes, in part or in whole, is only permitted with the express authorisation of Volkswagen AG.
satelettronica

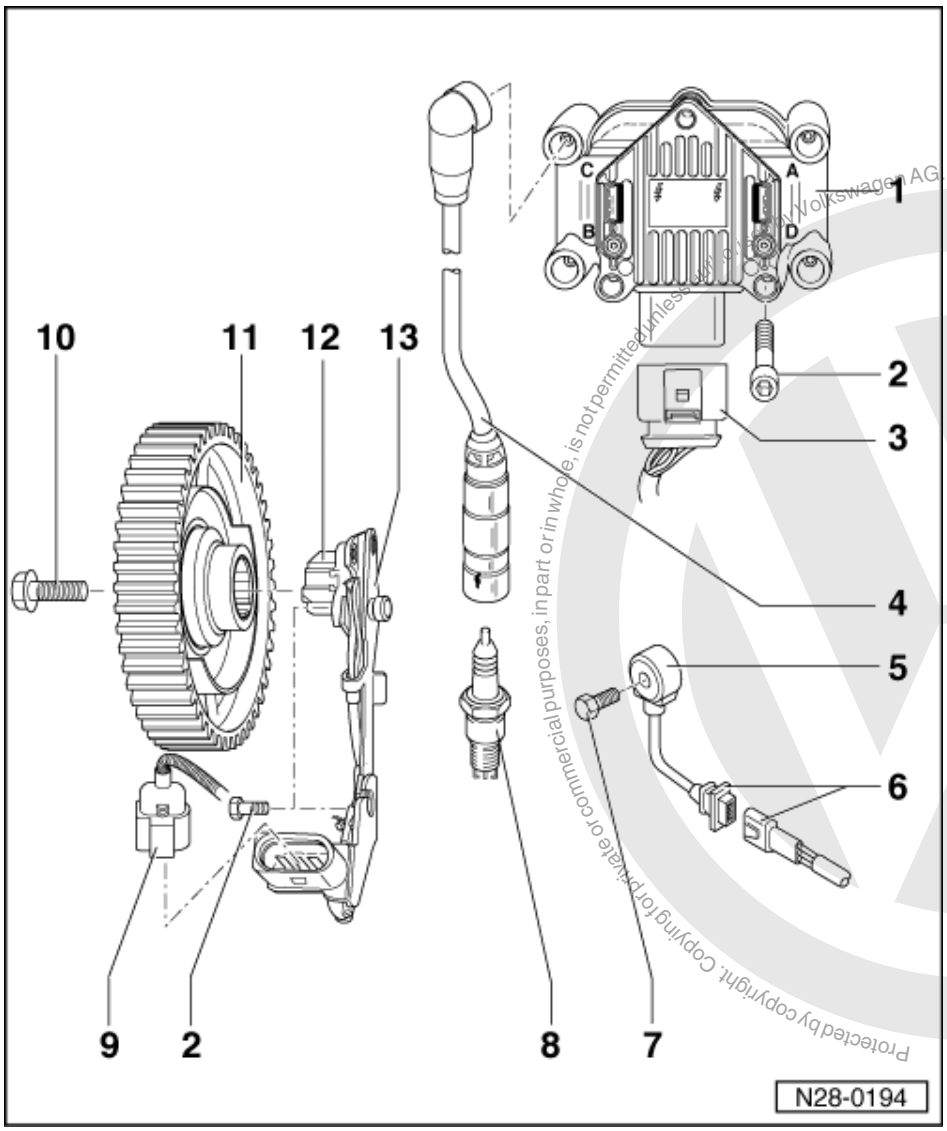

12 Hall sender (G40)*

- Fitting location => Page 69 , engine compartment overview
- Checking => Page 175

13 Bracket

- For Hall sender

1.4 - Safety precautions

To prevent injuries to persons and/or damage to the injection and ignition system, the following must be observed:

- Do not touch or pull off ignition wiring when engine is running or turning at starter speed.
- The ignition must be switched off when disconnecting or connecting injection and ignition system wiring as well as test instrument cables.
- If the engine is to be turned at starter speed, without starting:

Protected by copyright. Copying for private or commercial purposes, in part or in whole, is not permitted unless authorised by Volkswagen AG. Volkswagen AG does not guarantee or accept any liability with respect to the correctness of information in this document. Copyright by Volkswagen AG.
satelettronica

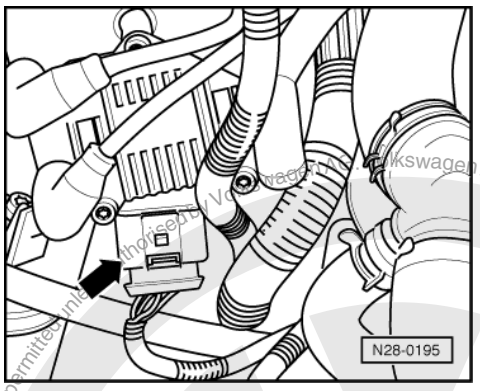

-> Pull 4 pin connector off ignition transformer (N152) -arrow-.

Observe following if test and measuring instruments are required during a test drive:

- Test and measuring instruments must be secured to rear seat and operated by a 2nd person from this location.

  If test and measuring instruments are operated from front passenger's seat and the vehicle is involved in an accident, there is a possibility that the person sitting in this seat may receive serious injuries when the airbag is triggered.

1.5 - Test data, spark plugs

Engine code	APF
Firing order	1-3-4-2
Spark plugs1)2)	
VW/Audi	101 000 033 AA
Manufacturer's designation	BKUR 6 ET-10
Electrode gap	0.9...1.1 mm
Tightening torque	30 Nm

1) For up-to-date specifications also for spark plug change intervals.

=> Exhaust emissions test binder

2) Remove and install spark plugs with plug spanner 3122 B

1.6 - Checking Hall sender

Note:

Only gold contacts may be used for servicing contacts in connector for Hall sender.

Special tools, workshop equipment, testers, measuring instruments and auxiliary items required

- Hand multimeter V.A.G 1526 or multimeter V.A.G 1715
- Adapter set V.A.G 1594
- Test box V.A.G 1598/31
- Current flow diagram

Copyright by Volkswagen AG. Volkswagen AG does not guarantee or accept any liability with respect to the correctness of information in this document. Copyright by Volkswagen AG. Reproduced by copyright holder. Unauthorised reproduction, in whole or in part, is not permitted. Reproduced for private or commercial purposes, in part or in whole, is not permitted unless authorised by Volkswagen AG.
satelettronica

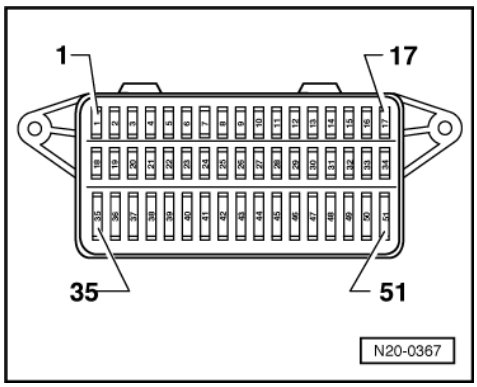

Check conditions

- -> Fuses 13 and 36 must be OK.
- Earth connection in plenum chamber OK.
- The battery voltage must be at least 11.5 V.
- All electrical consumers, e.g. lights and rear window heating must be switched off.
- If the vehicle is equipped with an air conditioning system, this must be switched off.
- Self-diagnosis has detected a fault with the Hall sender => Page 10 , Interrogating and erasing fault memory.

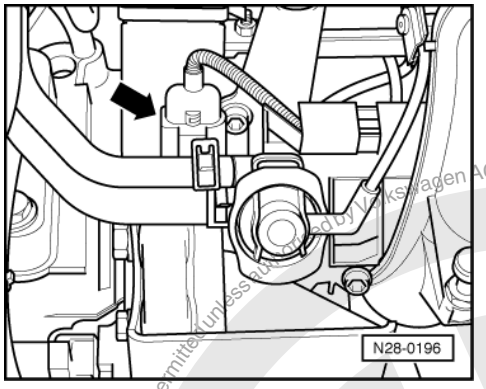

Test sequence

- -> Pull 3-pin connector off Hall sender -arrow-.

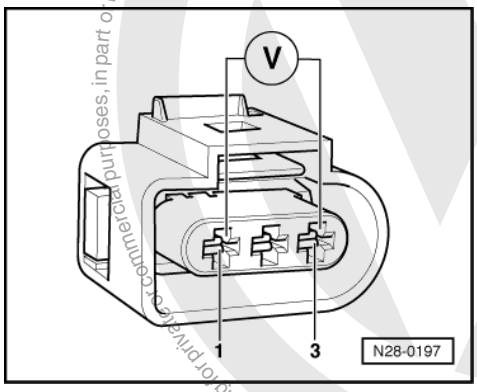

- -> Connect multimeter to measure voltage using aux. cables from V.A.G 1594 to contacts 1 (positive) and 3 (earth) on Hall sender connector.
- Switch on ignition.
  Specification: min. 4.5 V
- Switch off ignition.

If no voltage is present:

Protected by copyright. Copyright by Volkswagen AG. Volkswagen AG does not guarantee or accept any liability with respect to the correctness of information in this document. Copyright by Volkswagen AG. Not permitted for private, commercial purposes, in part or in whole, unless authorized by Volkswagen AG.
satelettronica

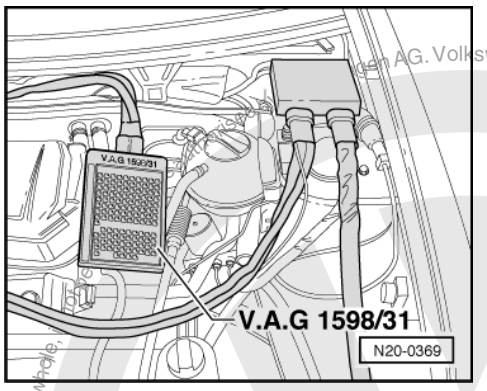

- Remove left cover for plenum chamber.
- -> Connect test box V.A.G 1598/31 to control unit wiring harness. The engine control unit remains disconnected.

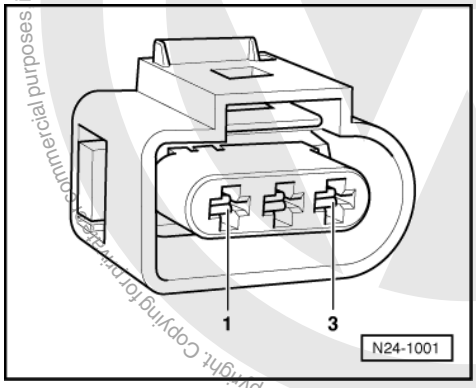

- -> Check wiring for open circuit between test box and 3-pin connector using current flow diagram.
  Contact 1 and test box socket 89
  Contact 2 and test box socket 105
  Contact 3 and test box socket 111
  Wire resistance: max. 1.5 ω
- Additionally check wires for short to one another, to vehicle earth and to battery positive.
  Specification: ∞ω

If no wiring fault is detected and voltage was present between contacts 1 + 3:

- Replace Hall sender (G40)
  =>Page 174 , item 12 .
- Interrogate fault memory, if necessary, repair any faults and then erase fault memory => Page 10 , interrogating and erasing fault memory.

If no wiring fault is detected and voltage was present between contacts 1 + 3:

- Replace engine control unit
  => Page 145 .

1.7 - Checking ignition transformer

Special tools, workshop equipment, testers, measuring instruments and auxiliary items required

- Hand multimeter V.A.G 1526 or multimeter V.A.G 1715
- Diode test lamp V.A.G 1527
- Adapter set V.A.G 1594
- Test box V.A.G 1598/31
- Current flow diagram

satelettronica

Check conditions

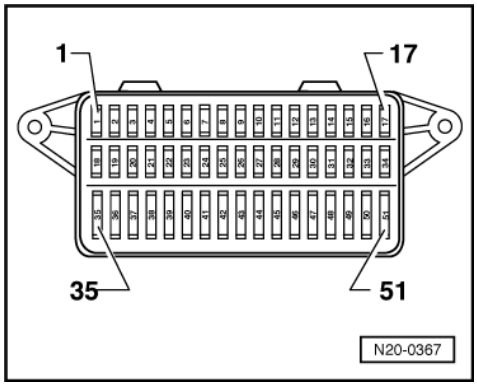

- -> Fuses 13 and 36 must be OK.
- The battery voltage must be at least 11.5 V.
- Earth connection in plenum chamber OK.
- All electrical consumers, e.g. lights and rear window heating must be switched off.
- If the vehicle is equipped with an air conditioning system, this must be switched off.
- Engine speed sender must be OK, checking =>Page 116 .

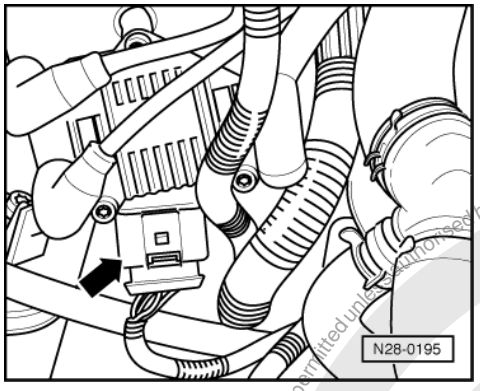

- The Hall sender must be OK, checking => Page 175 .

Test sequence

- -> Pull 4 pin connector off ignition transformer (N152) -arrow-.

Checking voltage supply

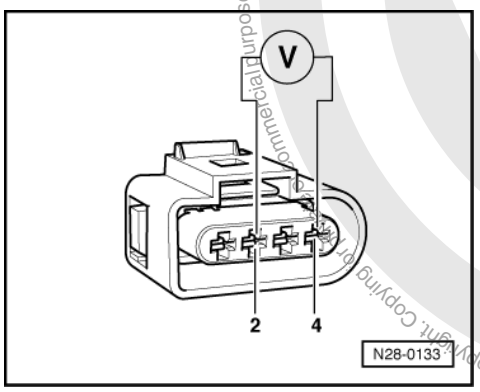

- -> Using multimeter and adapter cables from V.A.G 1594 measure the supply voltage between contacts 2 (positive) + 4 (earth) of disconnected connector.
- Switch on ignition.
  Specification: min. 11.5 V

satelettronica
Copyright by Volkswagen AG. Volkswagen AG does not guarantee or accept any liability with respect to the correctness of information in this document. Copyright by Volkswagen AG. Copying or commercial purposes, in part or in whole, is not permitted unless authorised by Volkswagen AG.

- Switch off ignition.

If no voltage is present:

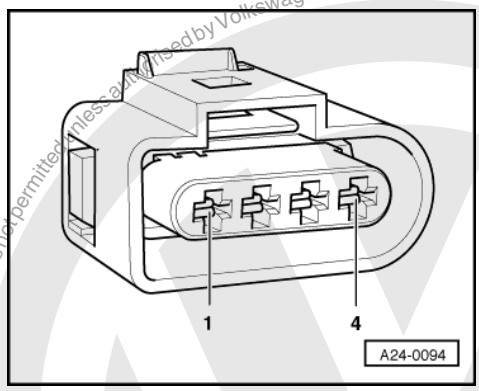

- -> Check wire between 4 pin connector contact 2 and relay plate for open circuit according to current flow diagram.
  Wire resistance: max. 1.5 ω
- Check wire between 4 pin connector contact 4 and earth for open circuit according to current flow diagram.
  Wire resistance: max. 1.5 ω

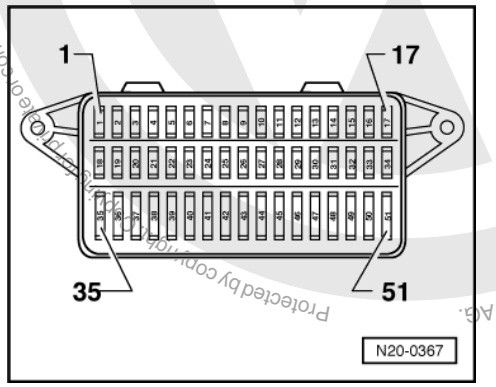

Checking activation

Warning! During the following test do not touch the terminals of the ignition transformer or test cables.

- -> Pull fuel pump fuse No. 40 out of fuse holder.

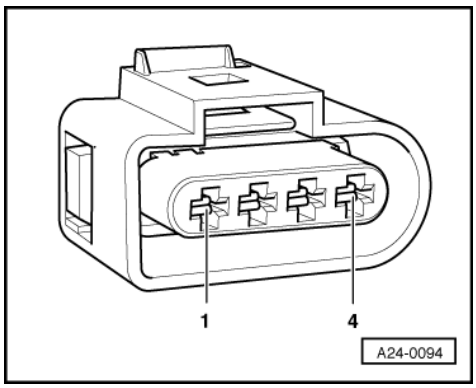

- -> Connect diode test lamp V.A.G 1527 with adapter cables from V.A.G 1594 to
  contacts 1 + 4 (ignition output 1),
  contacts 3 + 4 (ignition output 2)
  of disconnected connector.
- Get a 2nd person to operate starter and check the ignition signal from engine control unit.
  The LED must flicker

Protected by copyright. Copyright by Volkswagen AG. Volkswagen AG does not guarantee or accept any liability with respect to the correctness of information in this document. Copyright by Volkswagen AG. Protected by copyright. Copying for private or commercial purposes, in part or in whole, is not permitted unless authorised by Volkswagen AG.
satelettronica

- Switch off ignition.
- Fit fuel pump fuse No. 40 into fuse holder.

If the LED flickers and there is voltage between contacts 2 + 4:

- Replace ignition transformer (N152)
  => Page 171 , item 1 .

Note:

The ignition transformer and output stage are combined in a single component and cannot be renewed separately.

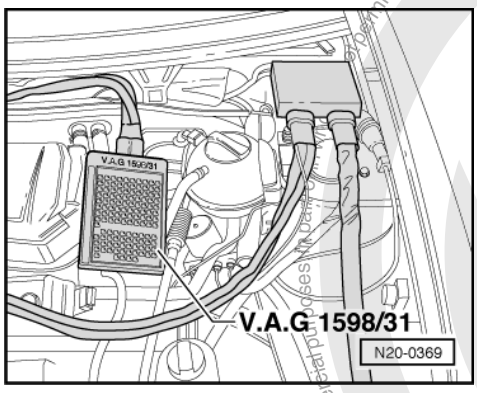

- Interrogate fault memory, if necessary, repair any faults and then erase fault memory => Page 10 , interrogating and erasing fault memory.

The LED does not flicker:

- Remove left cover for plenum chamber.
- -> Connect test box V.A.G 1598/31 to control unit wiring harness. The engine control unit remains disconnected.

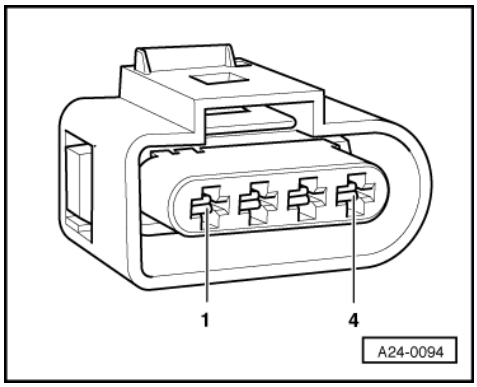

- -> Check wiring for open circuit between test box and 4-pin connector referring to current flow diagram.
  Contact 1 and test box socket 112
  Contact 3 and test box socket 113
  Wire resistance: max. 1.5 ω
- Additionally check wires for short to one another, to vehicle earth and to battery positive.
  Specification: ∞ω

If no wiring fault is detected and voltage was present between contacts 2+4:

- Replace engine control unit
  => Page 145 .

Protected by copyright. Copyright by Volkswagen AG.
Copying for private or commercial purposes, in part or in whole, is not permitted unless authorised by Volkswagen AG. Volkswagen AG does not guarantee or accept any liability with respect to the correctness of information in this document.
satelettronica

Checking secondary resistance

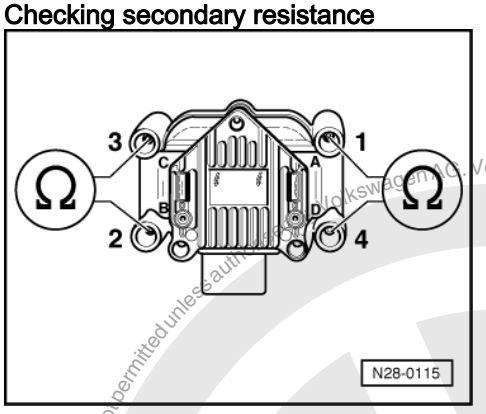

- -> Check the secondary resistance on terminal 4 between
  Cyl. 1+Cyl. 4,
  Cyl. 2+Cyl. 3.
  Specification: 4.0... 6.0 kω (at room temperature)

If the specifications are not attained:
- Replace ignition transformer (N152)
  => Page 171 , item 1 .

Note:
The ignition transformer and output stage are combined in a single component and cannot be renewed separately.
- Interrogate fault memory, if necessary, repair any faults and then erase fault memory => Page 10 , interrogating and erasing fault memory.

1.8 - Checking knock sensor

Notes:
- It is extremely important to keep to the tightening torque of 20 Nm to ensure the knock sensors perform perfectly.
- The knock sensor might misinterpret vibrations of loose components as knocking. Therefore check that engine ancillaries are securely mounted.
- Only gold-plated contacts may be used when servicing the knock sensor connector contacts.

Special tools, workshop equipment, testers, measuring instruments and auxiliary items required
- Hand multimeter V.A.G 1526 or multimeter V.A.G 1715
- Adapter set V.A.G 1594
- Test box V.A.G 1598/31
- Current flow diagram

Test conditions
- Self-diagnosis has detected a fault on the knock sensor =>Page 10 , Interrogating and erasing fault memory.

Checking resistance and wiring of knock sensor

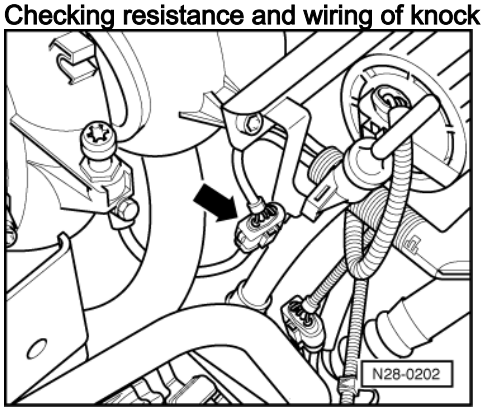

satelettronica

- -> Disconnect black 3-pin connector for knock sensor 1 (G61) -arrow-.

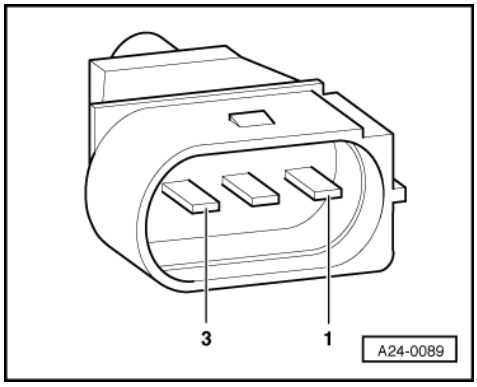

- -> Measure resistance between contacts 1 + 2, 1 + 3 and 2 + 3 of knock sensor connector.
  Specification: ∞ω

If the specification is not obtained:

- Replace knock sensor (G61) =>Page 172 , item 5 .
- Interrogate fault memory, if necessary, repair any faults and then erase fault memory => Page 10 , interrogating and erasing fault memory.

If no fault in knock sensor is detected:

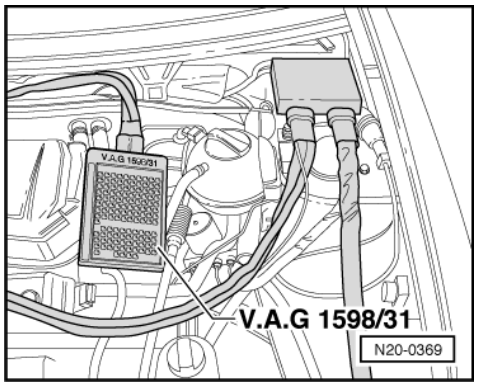

- Remove left cover for plenum chamber.
- -> Connect test box V.A.G 1598/31 to control unit wiring harness. The engine control unit remains disconnected.

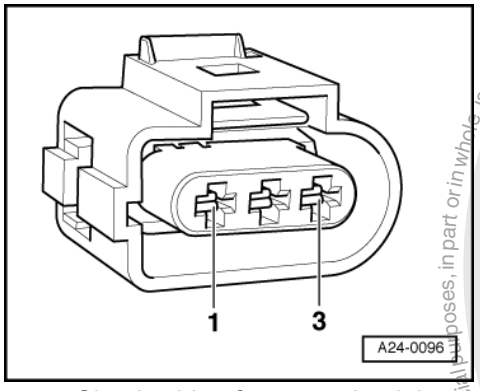

- -> Check wiring for open circuit between test box and 3-pin connector using current flow diagram.
  Contact 1 and test box socket 109
  Contact 2 and test box socket 101
  Contact 3 and test box socket 100
  Wire resistance: max. 1.5 ω
- Additionally check wires for short to one another, to vehicle earth and to battery positive.

Protected by copyright. Copying for private or commercial purposes, in part or in whole, is not permitted unless authorised by Volkswagen AG. Volkswagen AG does not guarantee or accept any liability with respect to the correctness of information in this document. Copyright by Volkswagen AG.
satelettronica

Specification: ∞ω

If no fault is detected in the wiring:

- Loosen knock sensor and tighten again to 20 Nm.
- Carry out test drive.

Observe the valid safety precautions when carrying out a test drive => Page 174 .

During the road test the following operating conditions must be fulfilled:
- The coolant temperature must exceed 80 °C .
- When the temperature is reached, the operating conditions
  - Idling
  - Part throttle
  - Enrichment
  - Full throttle
  - Overrun

  must be attained several times.
- At full throttle the speed must exceed 3500 rpm.

- Again interrogate the control unit fault memory.

If the fault is still present:

- Replace knock sensor (G61) =>Page 172 , item 5 .
- Interrogate fault memory, if necessary, repair any faults and then erase fault memory => Page 10 , interrogating and erasing fault memory.

1.9 - Check misfiring recognition

Special tools, workshop equipment, testers, measuring instruments and auxiliary items required

◆ Fault reader V.A.G 1551 or vehicle system tester V.A.G 1552 with cable V.A.G 1551/3

Test sequence

- Connect fault reader V.A.G 1551 (V.A.G 1552). Start engine and select "Address word" 01 of engine control unit. When doing this the engine must be running at idling speed.
  (Connecting fault reader and selecting engine control unit => Page 4 .)

-> Indicated on display:

```
Rapid data transfer      HELP
Select function XXX
```

- Press keys 0 and 8 for the function "Read measured value block" and confirm entry with Q key.

-> Indicated on display:

```
Read measured value block
Input display group number XXX
```

- Press keys 0, 1 and 4 for "Display group number 14" and confirm entry with Q key.

-> Indicated on display:
(1...4 = Display zones)

```
Read measured value block 14
     1     2     3     4
```

- Check misfire recognition status in display zone 4.
  Specification: "activated"
- Check total number of misfires since engine was started in display zone 3:

Protected by copyright. Copying for private or commercial purposes, in part or in whole, is not permitted unless authorised by Volkswagen AG. Volkswagen AG does not guarantee or accept any liability with respect to the correctness of information in this document. Copyright by Volkswagen AG.
satelettronica

Specification: 0...20

Note:

The specification is only valid for a period of max. 5 minutes after the engine was started.

If the specifications are obtained:

- Press ⇒key.
- Press keys 0 and 6 for the "End output" function and confirm input with the Q key.
- Switch off ignition.

If the specifications are not attained:

- Change to display group 15 as follows:
  V.A.G 1551: Press key 3
  V.A.G 1552: Press key ↑

-> Indicated on display:
(1...4 = Display zones)

```
Read measured value block 15
     1     2     3     4
```

- Check misfire recognition status in display zone 4.
  Specification: "activated"
- Check misfiring of cyl. 1...cyl. 3 since engine was started in display zones 1...3.
  Specification: 0...5

Note:

The specification is only valid for a period of max. 5 minutes after the engine was started.

If the specifications are not obtained:

- Press ⇒key.
- Press keys 0 and 6 for the "End output" function and confirm input with the Q key.
- Switch off ignition.
- =>Page 57 , Evaluating display group 15 and display group 16.

If the specifications are obtained:

- Change to display group 16 as follows:
  V.A.G 1551: Press key 3
  V.A.G 1552: Press key ↑

-> Indicated on display:
(1...4 = Display zones)

```
Read measured value block 16
     1     2     3     4
```

- Check misfire recognition status in display zone 4.
  Specification: "activated"
- Check misfiring of cyl. 4 since engine was started in display zone 1
  Specification: 0...5
- Press ⇒key.
- Press keys 0 and 6 for the "End output" function and confirm input with the Q key.
- Switch off ignition.

If the specification is not attained:

- =>Page 57 , Evaluating display group 15 and display group 16.

Protected by copyright. Copyright by Volkswagen AG.
Copying for private or commercial purposes, in part or in whole, is not permitted unless authorised by Volkswagen AG. Volkswagen AG does not guarantee or accept any liability with respect to the correctness of information in this document.
satelettronica